FLORIDA PRODUCT APPROVAL #17519

USE THIS SHEET FOR UNCLIPPED MULLIONS

GENERAL NOTES, UNCLIPPED 5400/5500 MULLIONS:

1) DETAILS SHOWN ARE FOR THE MULLION ONLY. ANCHORS SHOWN ARE IN ADDITION TO ANY ANCHORS REQUIRED FOR THE FENESTRATION PRODUCT INSTALLATION. TYPICAL APPLICATIONS ARE SHOWN. EACH SITUATION IS UNIQUE AND SHOULD BE EVALUATED BY AN EXPERIENCED INSTALLER FOR THE BEST INSTALLATION METHOD. OPTIONAL 1X OR 2X WOOD BUCKS IF USED, MUST BE ANCHORED PROPERLY TO TRANSFER LOADS AND ARE TO BE DESIGNED BY OTHERS.

2) THE TYPE AND NUMBER OF ANCHORS IS CRITICAL TO THE STRUCTURAL PERFORMANCE OF THE MULLED UNITS.

3) THE ANCHORAGE METHODS SHOWN HAVE BEEN DESIGNED TO RESIST THE WINDLOADS CORRESPONDING TO THE REQUIRED DESIGN PRESSURE. MULLIONS ARE CALCULATED TO DEFLECT NO MORE THAN L/180. THE 1/3 STRESS INCREASE WAS NOT USED IN THIS ANCHOR EVALUATION. THE 1.6 LOAD DURATION FACTOR WAS USED FOR THE EVALUATION OF WOOD SCREWS.

4) PROPER SEALING OF ENTIRE ASSEMBLY IS THE RESPONSIBILITY OF OTHERS AND IS BEYOND THE SCOPE OF THESE INSTRUCTIONS.

5) USE THE COMBINED WIDTH OR HEIGHT OF ONLY TWO ADJACENT FENESTRATION PRODUCTS TO DETERMINE PRESSURES AND ANCHORAGE FOR THE COMMON MULLION, SEE EXAMPLES ON THIS SHEET. FOR MULTIPLE UNITS, CONSIDER ONLY TWO ADJACENT UNITS AT A TIME WHEN USING THE DESIGN PRESSURE AND ANCHORAGE TABLES. THE LOWEST DESIGN PRESSURE OF MULTIPLE MULLIONS OR FENESTRATION PRODUCTS SHALL APPLY.

6) ANCHOR EMBEDMENT TO BASE MATERIAL SHALL BE BEYOND WALL DRESSING OR STUCCO. WOOD BUCKS BY OTHERS, MUST BE ANCHORED PROPERLY TO TRANSFER LOADS TO THE STRUCTURE. ANCHORS SHALL BE COATED OR CORROSION RESISTANT AS APPROPRIATE FOR SUBSTRATE MATERIAL. DISSIMILAR MATERIALS SHALL BE PROTECTED AS REQUIRED TO PREVENT REACTIONS.

7) MULLIONS HAVE BEEN DESIGNED & TESTED TO COMPLY WITH THE REQUIREMENTS OF THE FLORIDA BUILDING CODE, AND ARE APPROVED FOR IMPACT AND NON-IMPACT APPLICATIONS. IMPACT APPLICATIONS ARE LIMITED TO WINDZONES 1, 2 & 3 AS DEFINED BY ASTM E1996. MULLIONS ARE ONLY TO BE USED WITH PGT-APPROVED FENESTRATION PRODUCTS HAVING CURRENT APPROVALS.

8) QUANTITY OF UNITS WITHIN A MULTIPLE MULLED ASSEMBLY IS UNLIMITED PROVIDED THAT THE SPAN AND OPENING WIDTH/HEIGHT OF EACH INDIVIDUAL MULLION COMPLIES WITH THE REQUIREMENTS OF THIS APPROVAL.

9) FOR ADDITIONAL MULLIONS, OPTIONS AND CONFIGURATIONS NOT SHOWN ON THIS APPROVAL, REFER TO FLORIDA PRODUCT APPROVAL #261.

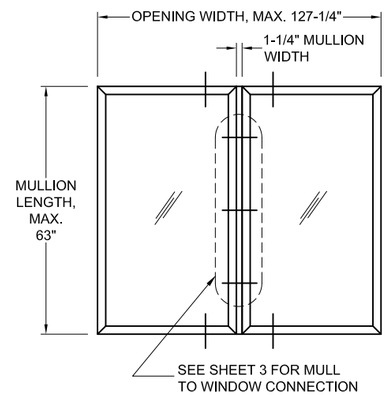


SINGLE VERTICAL MULLION

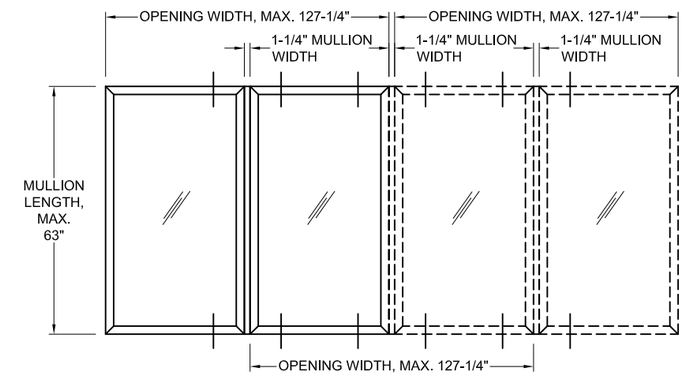


MULTIPLE VERTICAL MULLIONS

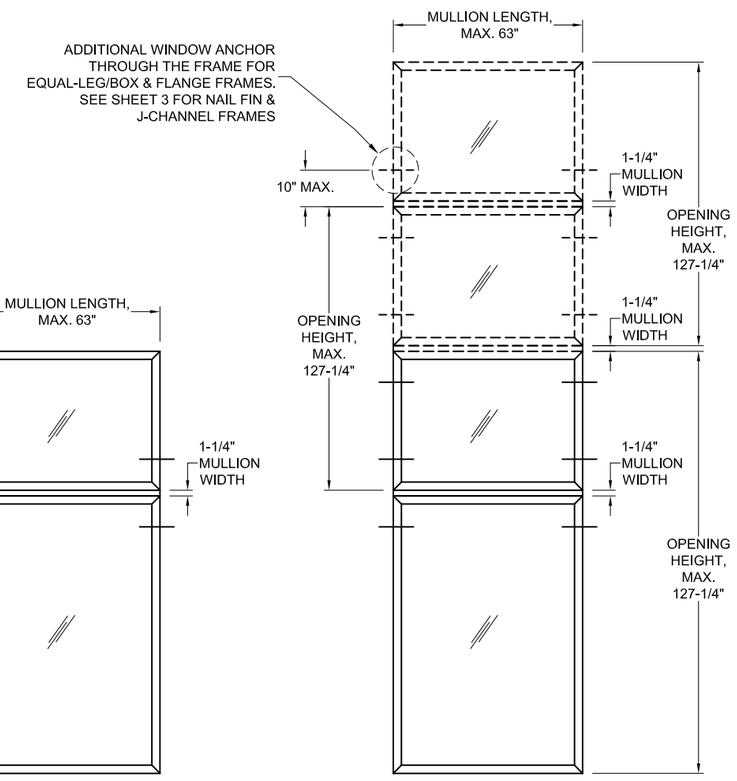


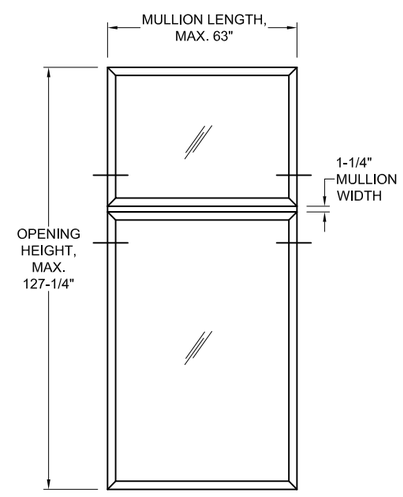


SINGLE HORIZONTAL MULLION

MULTIPLE HORIZONTAL MULLIONS

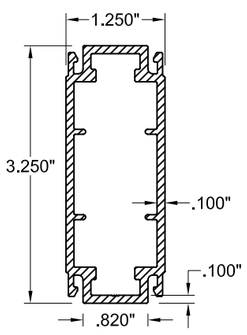


1.25" X 3.25" X .100"
MULLION
6005-T5 ALUMINUM

TABLE 1

| Mullion Capacity Table (lbs/ft$^2$) | | |
|---|---|---|
| 1.25 x 3.25 x .100 Alum. Tube Mullion | Opening Width or Height up to 127-1/4" | |
| | All Loading Types | |
| | Mullion Capacity | Anchorage Requirement |
| Mullion Length up to 63" | +70.0 lbs/ft$^2$ -70.0 lbs/ft$^2$ | Install 4 additional window anchors through the window frames at 10" max. on each side of the mullion/frame assembly tube centerline. See figures on this sheet. |

ALL MULLIONS ON THIS APPROVAL ARE RATED TO THE AAMA 450-10 STANDARD.

NOTES FOR UNCLIPPED MULLIONS/FRAME ASSEMBLY TUBE:

1) NOT TO BE USED WITH SINGLE OR DOUBLE HUNG WINDOWS.

2) NOT TO BE USED IN CROSS OR TEE CONFIGURATIONS, SEE NEXT SHEET.

| Rev. | Date | Rev.# |
|---|---|---|
| NO CHANGES, THIS SHEET. SB | 10/13/23 | D |


PREPARED BY A. LYNN MILLER
1070 TECHNOLOGY DRIVE
N. VENICE, FL 34275
(941) 480-1600


REGISTRATION #29296


COPYRIGHT © 2023 PGT, INC., LIMITED LICENSE TO MAKE COPIES FOR PERMITTING.


PGT Custom Windows and Doors
1070 TECHNOLOGY DRIVE
N. VENICE, FL 34275
(941) 480-1600

| Series | Desc. | Title | Sheet | DWG No. | Drawn By | Date |
|---|---|---|---|---|---|---|
| 5400/5500 | UNCLIPPED MULLIONS | 5400/5500 SERIES ALUMINUM TUBE MULLIONS | 1 OF 9 | 5XMULLS-FPA | J ROSOWSKI | 02/03/15 |

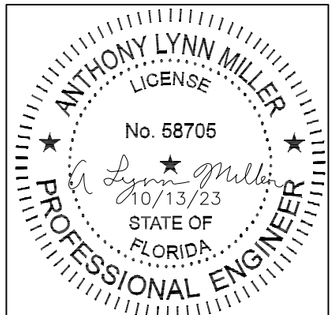


A. LYNN MILLER, P.E.
P.E.# 58705

GENERAL NOTES, CLIPPED 5400/5500 MULLIONS:

1) DETAILS SHOWN ARE FOR THE MULLION ONLY. ANCHORS SHOWN ARE IN ADDITION TO ANY ANCHORS REQUIRED FOR THE FENESTRATION PRODUCT INSTALLATION. TYPICAL APPLICATIONS ARE SHOWN. EACH SITUATION IS UNIQUE AND SHOULD BE EVALUATED BY AN EXPERIENCED INSTALLER FOR THE BEST INSTALLATION METHOD. OPTIONAL 1X OR 2X WOOD BUCKS IF USED, MUST BE ANCHORED PROPERLY TO TRANSFER LOADS AND ARE TO BE DESIGNED BY OTHERS.

2) THE TYPE AND NUMBER OF ANCHORS IS CRITICAL TO THE STRUCTURAL PERFORMANCE OF THE MULLED UNITS. MULLIONS HAVE BEEN TESTED AS "FREE-FLOATING" AND DO NOT NEED TO BE DIRECTLY ATTACHED TO THE MULLION CLIPS, BUT SHALL NOT HAVE A GAP OF MORE THAN 1/4" FROM THE CLIP.

3) THE ANCHORAGE METHODS SHOWN HAVE BEEN DESIGNED TO RESIST THE WINDLOADS CORRESPONDING TO THE REQUIRED DESIGN PRESSURE. MULLIONS ARE CALCULATED TO DEFLECT NO MORE THAN L/180. THE 1/3 STRESS INCREASE WAS NOT USED IN THIS ANCHOR EVALUATION. THE 1.6 LOAD DURATION FACTOR WAS USED FOR THE EVALUATION OF WOOD SCREWS.

4) PROPER SEALING OF ENTIRE ASSEMBLY IS THE RESPONSIBILITY OF OTHERS AND IS BEYOND THE SCOPE OF THESE INSTRUCTIONS.

5) USE THE COMBINED WIDTH OR HEIGHT OF ONLY TWO ADJACENT FENESTRATION PRODUCTS TO DETERMINE PRESSURES AND ANCHORAGE FOR THE COMMON MULLION, SEE EXAMPLES ON THIS SHEET. FOR MULTIPLE UNITS, CONSIDER ONLY TWO ADJACENT UNITS AT A TIME WHEN USING THE DESIGN PRESSURE AND ANCHORAGE TABLES. THE LOWEST DESIGN PRESSURE OF MULTIPLE MULLIONS OR FENESTRATION PRODUCTS SHALL APPLY.

6) WHEN FINDING YOUR SIZE IN THE MULLION TABLES, ALWAYS ROUND UP TO THE NEXT SIZE SHOWN ON THE TABLE(S).

7) ANCHOR EMBEDMENT TO BASE MATERIAL SHALL BE BEYOND WALL DRESSING OR STUCCO. WOOD BUCKS BY OTHERS, MUST BE ANCHORED PROPERLY TO TRANSFER LOADS TO THE STRUCTURE. ANCHORS SHALL BE COATED OR CORROSION RESISTANT AS APPROPRIATE FOR SUBSTRATE MATERIAL. DISSIMILAR MATERIALS SHALL BE PROTECTED AS REQUIRED TO PREVENT REACTIONS.

8) MULLIONS AND CLIPS HAVE BEEN DESIGNED & TESTED TO COMPLY WITH THE REQUIREMENTS OF THE FLORIDA BUILDING CODE, AND ARE APPROVED FOR IMPACT AND NON-IMPACT APPLICATIONS. IMPACT APPLICATIONS ARE LIMITED TO WINDZONES 1, 2 & 3 AS DEFINED BY ASTM E1996. MULLIONS ARE ONLY TO BE USED WITH PGT-APPROVED FENESTRATION PRODUCTS HAVING CURRENT APPROVALS.

9) QUANTITY OF UNITS WITHIN A MULTIPLE MULLED ASSEMBLY IS UNLIMITED PROVIDED THAT THE SPAN AND OPENING WIDTH/HEIGHT OF EACH INDIVIDUAL MULLION COMPLIES WITH THE REQUIREMENTS OF THIS APPROVAL.

10) FOR ADDITIONAL MULLIONS, OPTIONS AND CONFIGURATIONS NOT SHOWN ON THIS APPROVAL, REFER TO FLORIDA PRODUCT APPROVAL #261.

USE THIS SHEET FOR CLIPPED MULLIONS

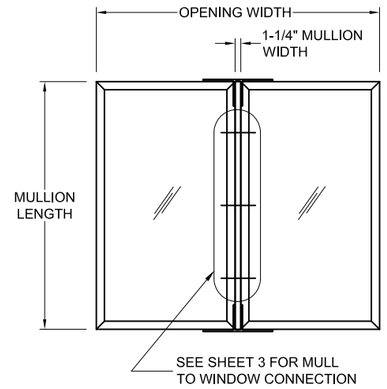


SINGLE VERTICAL MULLION

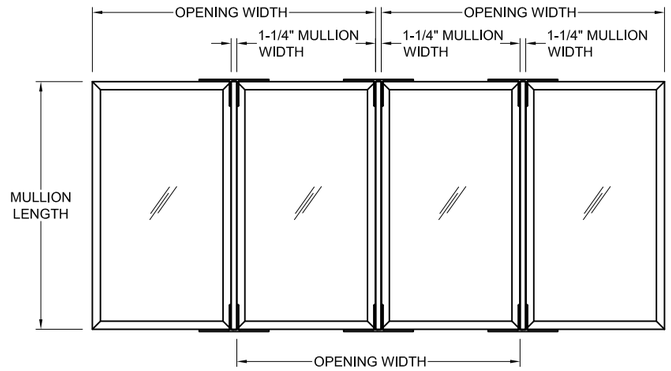


MULTIPLE VERTICAL MULLIONS

NOTES FOR CLIPPED MULLIONS:

1) FOR MAXIMUM SIZES, SEE TABLES 2A-4A.

2) SEE SHEET 9 FOR INSTRUCTIONS ON USING TABLES 2A-4A.

3) CLIPPED MULLIONS MAY BE USED FOR ALL WINDOW TYPES. FOR CLIP ANCHORAGE, USE THE SAME ANCHOR AS WINDOW ANCHOR.

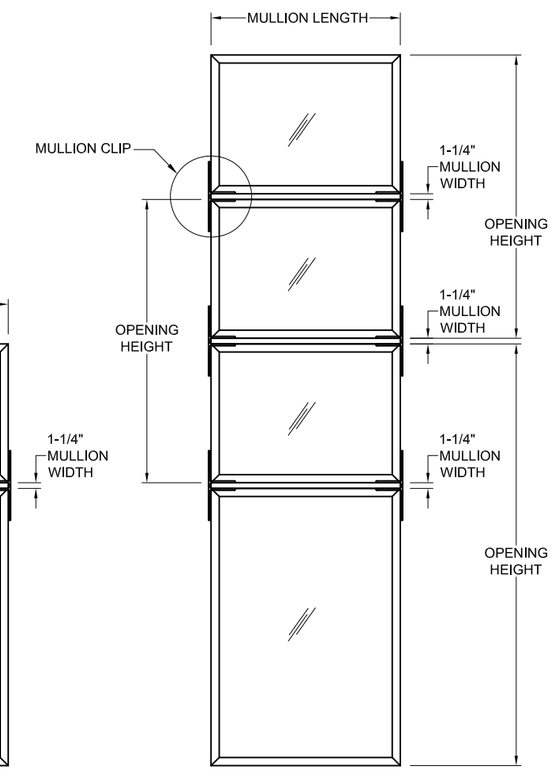


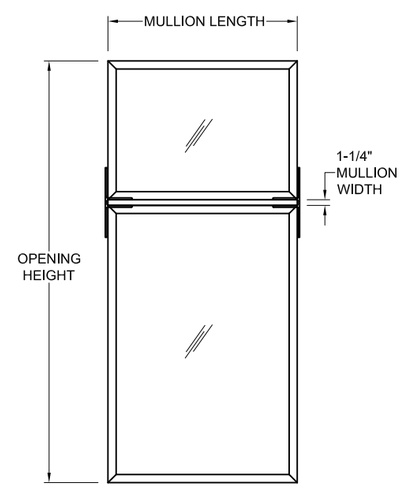


SINGLE HORIZONTAL MULLION

MULTIPLE HORIZONTAL MULLIONS

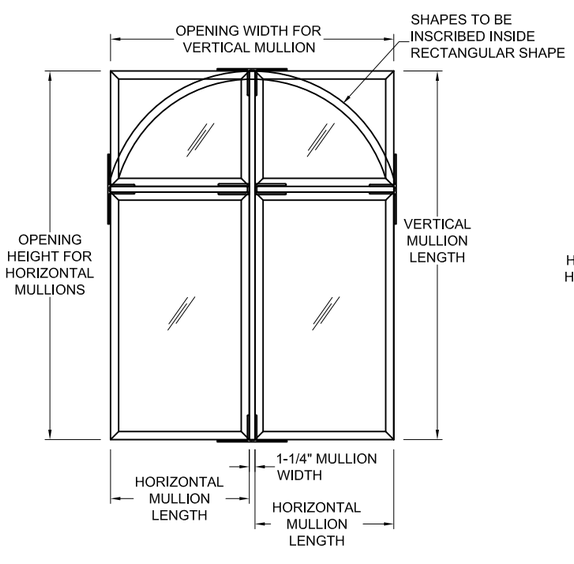


CROSS MULLION CONFIGURATION

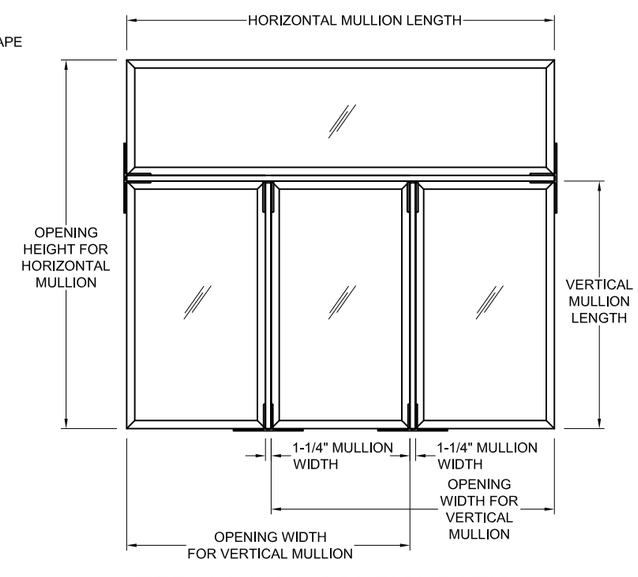


TEE MULLION CONFIGURATION

| Rev. | Date | Drawn By | DWG No. | Sheet |
|---|---|---|---|---|
| D | 10/13/23 | J ROSOWSKI | 5XMULLS-FPA | 2 OF 9 |

NO CHANGES, THIS SHEET. SB


PREPARED BY A. LYNN MILLER
1070 TECHNOLOGY DRIVE
N. VENICE, FL 34275
(941) 480-1600


REGISTRATION #29296


COPYRIGHT © 2023 PGT, INC., LIMITED LICENSE TO MAKE COPIES FOR PERMITTING.



PGT Custom Windows and Doors
1070 TECHNOLOGY DRIVE
N. VENICE, FL 34275
(941) 480-1600


Series: 5400/5500
Title: 5400/5500 SERIES ALUMINUM TUBE MULLIONS
Desc.: 1.25 X 3.25 CLIPPED MULLIONS

ANTHONY LYNN MILLER
LICENSE
No. 58705
STATE OF FLORIDA
PROFESSIONAL ENGINEER
10/13/23

A. LYNN MILLER, P.E.
P.E.# 58705

USE THIS SHEET FOR CLIPPED & UNCLIPPED MULLIONS

## CROSS-SECTION MULLION EXAMPLES

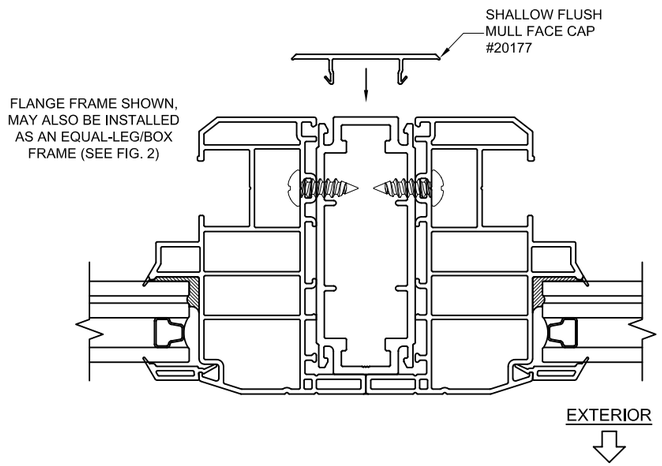


FIG. 1: 1.25" X 3.25" X .100" MULLION & FACE CAPS

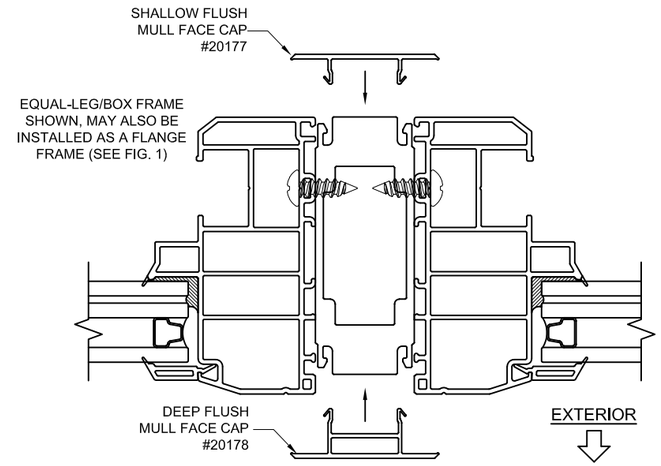


FIG. 2: 1.25" X 3.25" X .624" MULLION & FACE CAPS

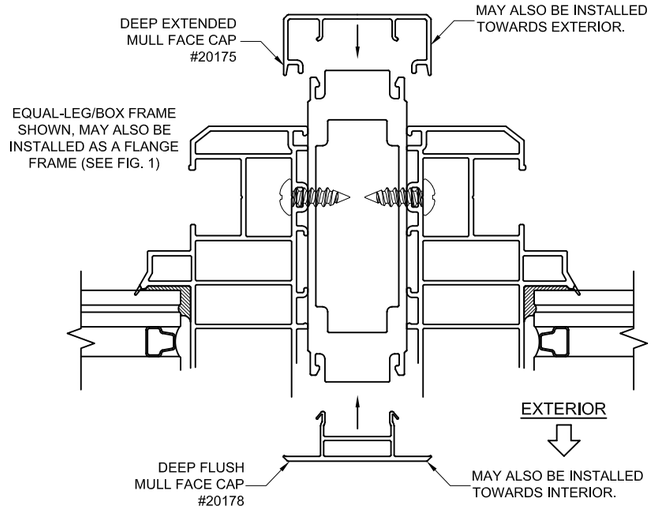


FIG. 3: 1.25" X 3.94" X .624" MULLION & FACE CAPS

NOTES FOR MULLION TO WINDOW ATTACHMENT:

1) RECOMMENDED ANCHOR LENGTH = MIN. 3/4"

2) USE ANCHOR TYPE AND SPACING AS PER THE WINDOW'S APPROVAL.

3) PICTURE WINDOW WITH VERTICAL MULLION SHOWN, ALL WINDOW TYPES AND MULLION ORIENTATIONS APPLICABLE.

4) IF APPLICABLE, NAIL FIN AND/OR FLANGE MAY BE REMOVED FROM THE WINDOW FRAME MEMBER BEING MULLED.

## FIG. 4: MULLION END CAP EXAMPLE

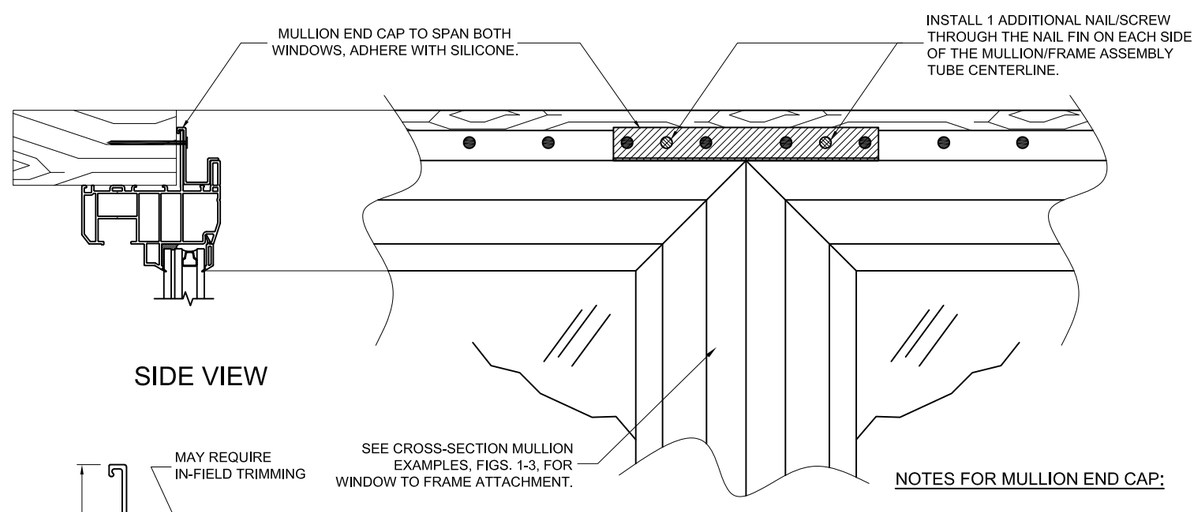


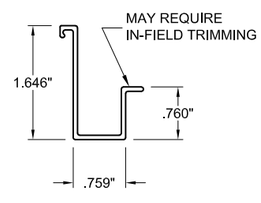


MULLION END CAP

RIGID PVC

2X SIDE VIEW

NOTES FOR MULLION END CAP:

1) APPLIES TO FIN OR J-CHANNEL FRAMES.

2) REQUIRED AT HEADER AND JAMBS.

3) PICTURE WINDOW WITH VERTICAL MULLION SHOWN, ALL WINDOW TYPES AND MULLION ORIENTATIONS APPLICABLE.

| Rev. | Date | Rev.# |
|---|---|---|
| NO CHANGES, THIS SHEET. SB | 10/13/23 | D |


PREPARED BY A. LYNN MILLER
1070 TECHNOLOGY DRIVE
N. VENICE, FL 34275
(941) 480-1600
REGISTRATION #29296



COPYRIGHT © 2023 PGT, INC., LIMITED LICENSE TO MAKE COPIES FOR PERMITTING.


PGT Custom Windows and Doors
1070 TECHNOLOGY DRIVE
N. VENICE, FL 34275
(941) 480-1600

| Series | Desc. | Title | Drawn By | Date |
|---|---|---|---|---|
| 5400/5500 | UNCLIPPED MULLIONS | 5400/5500 SERIES ALUMINUM TUBE MULLIONS | J ROSOWSKI | 02/03/15 |

| DWG No. | Sheet |
|---|---|
| 5XMULLS-FPA | 3 OF 9 |

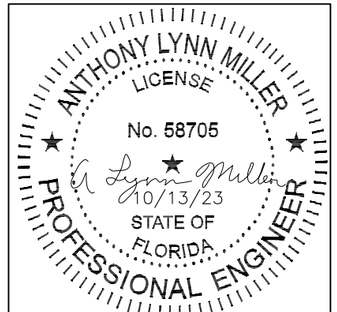


A. LYNN MILLER, P.E.
P.E.# 58705

USE THIS SHEET FOR CLIPPED MULLIONS

## DETAIL A:
MULLION TO 2X WOOD BUCK OR WOOD FRAMING (OFFSET CLIP SHOWN)

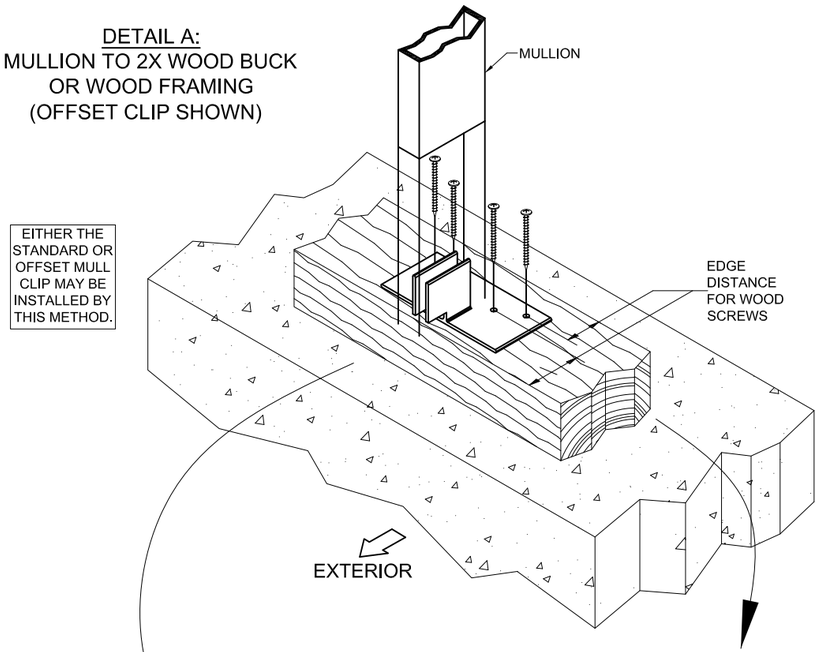


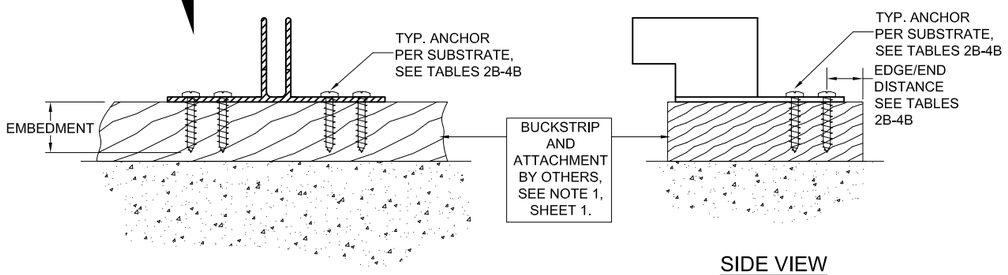


FRONT VIEW

SIDE VIEW

## DETAIL B:
MULLION ATTACHED TO 1X WOOD BUCK AND MASONRY (STANDARD CLIP SHOWN)

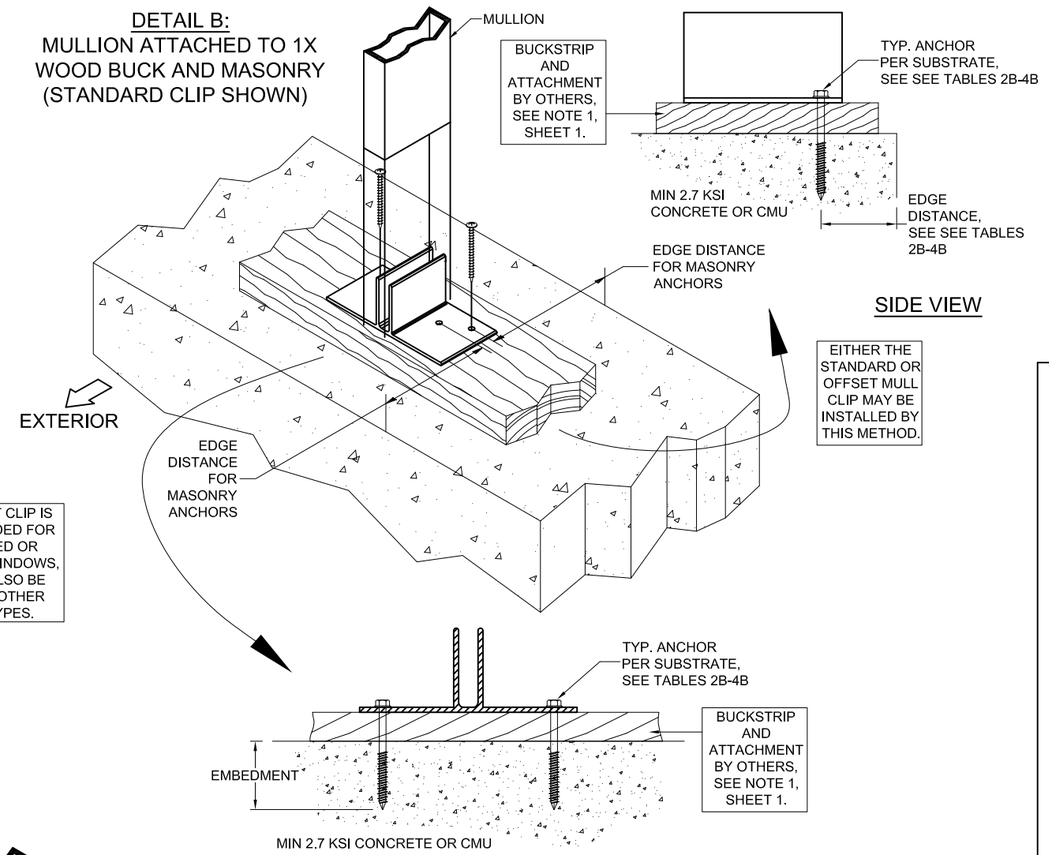


SIDE VIEW

THE OFFSET CLIP IS RECOMMENDED FOR FIN-FRAMED OR J-CHANNELWINDOWS, BUT MAY ALSO BE USED FOR OTHER FRAME TYPES.

FRONT VIEW

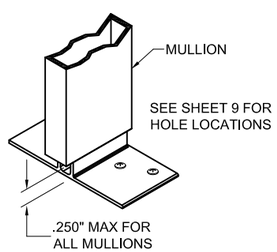


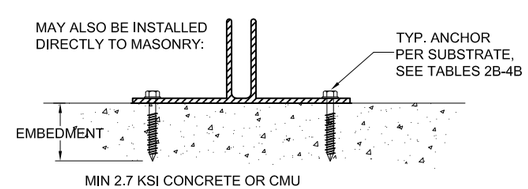


FRONT VIEW

INSTALLATION NOTES:

1) ANCHOR EMBEDMENT TO BASE MATERIAL SHALL BE BEYOND WALL DRESSING OR STUCCO.

2) QUANTITY OF ANCHORS AND MULLION SIZE SHOWN ABOVE ARE FOR PICTORIAL REPRESENTATION ONLY. BECAUSE THE ANCHOR CAPACITY IS BASED PARTLY ON THE ANCHOR TO ANCHOR DISTANCE, THE CORRECT QUANTITY AND LOCATION OF ANCHORS MUST BE FOLLOWED, REFER TO THE TABLES ON THE FOLLOWING SHEETS. FOR DETAILS A-C, EITHER THE STANDARD OR OFFSET CLIP MAY BE USED.

3) ANCHOR HEAD TYPE MAY BE PANHEAD, HEXHEAD OR FLATHEAD.

4) WOOD BUCKS ARE OPTIONAL, SEE DETAIL B, THIS SHEET.

| Rev. | Date | Rev.# |
|---|---|---|
| NO CHANGES, THIS SHEET. SB | 10/13/23 | D |


PREPARED BY A. LYNN MILLER
1070 TECHNOLOGY DRIVE
N. VENICE, FL 34275
(941) 480-1600
REGISTRATION #29296


COPYRIGHT © 2023 PGT, INC., LIMITED LICENSE TO MAKE COPIES FOR PERMITTING.


PGT Custom Windows and Doors
1070 TECHNOLOGY DRIVE
N. VENICE, FL 34275
(941) 480-1600

| Series | Desc. | Title | Sheet | DWG No. | Drawn By | Date |
|---|---|---|---|---|---|---|
| 5400/5500 | INSTALLATION INSTRUCTIONS A | 5400/5500 SERIES ALUMINUM TUBE MULLIONS | 4 OF 9 | 5XMULLS-FPA | J ROSOWSKI | 02/03/15 |

ANTHONY LYNN MILLER
LICENSE
No. 58705
A. Lynn Miller
10/13/23
STATE OF FLORIDA
PROFESSIONAL ENGINEER

A. LYNN MILLER, P.E.
P.E.# 58705

USE THIS SHEET FOR
CLIPPED MULLIONS

## DETAIL C:
FIELD-MODIFIED MULLION CLIP
(F-CLIP)

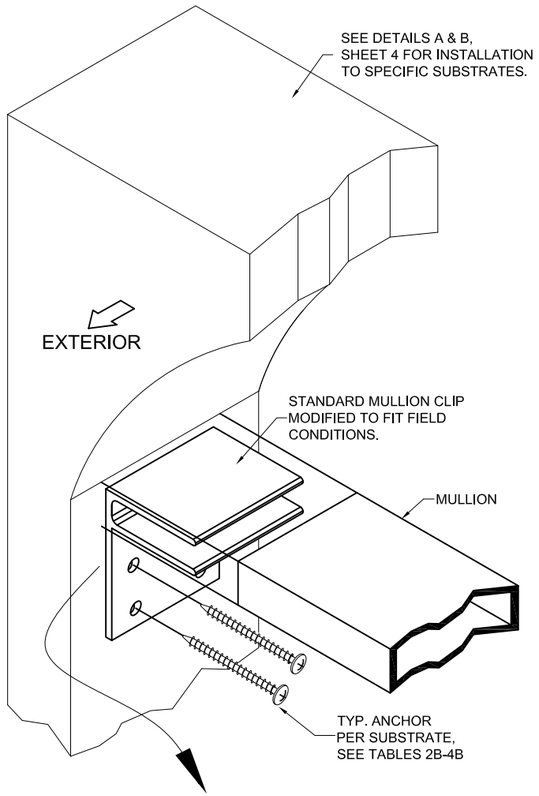


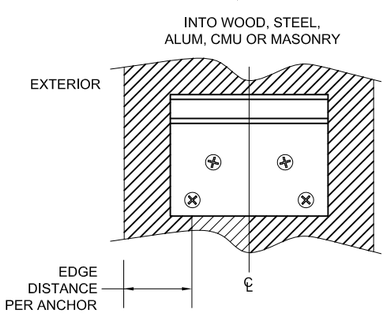


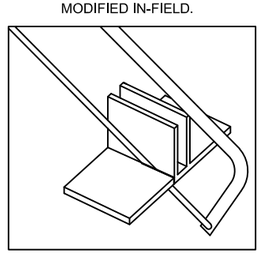


## DETAIL D:
ANGLE MULLION CLIP
(ANGLE CLIP)

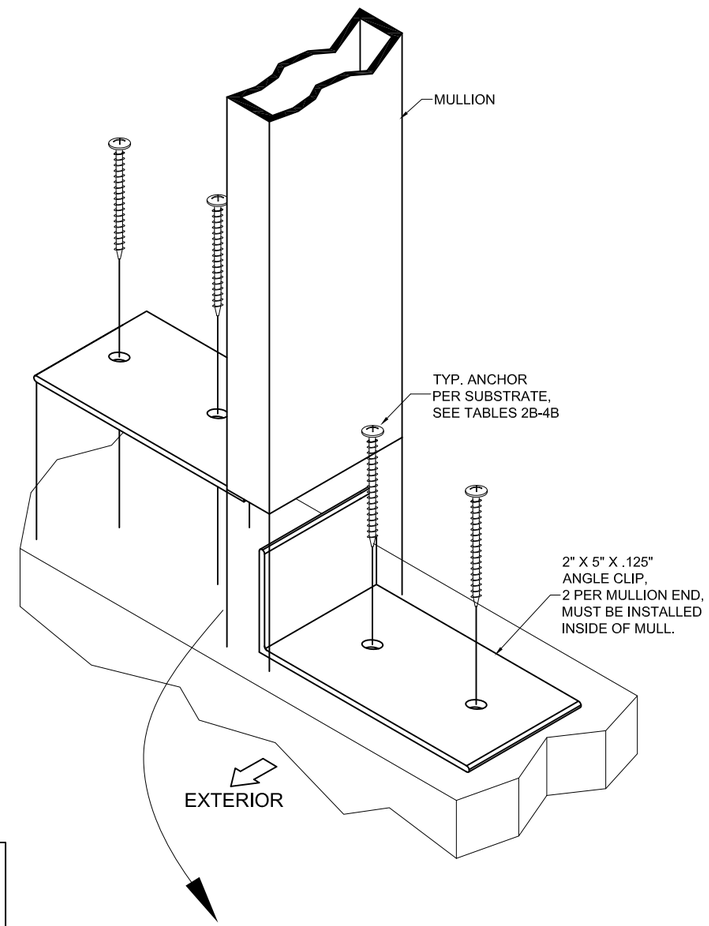


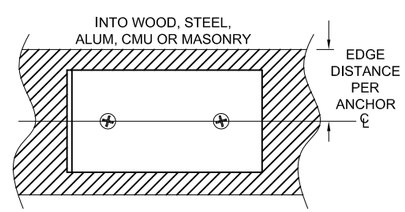


NOTES FOR INSTALLATION OPTION D:

1) USE 2 ANGLE CLIPS PER MULLION END. CLIPS MUST BE INSERTED INSIDE OF MULLION.

## DETAIL E:
MULLION TO MULLION
INTERSECTION
(U-CLIP)

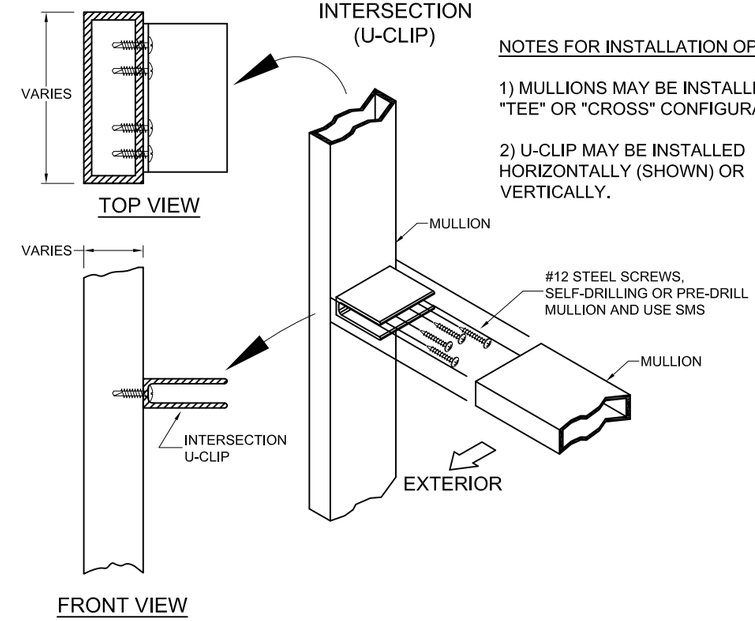


NOTES FOR INSTALLATION OPTION E:

1) MULLIONS MAY BE INSTALLED IN "TEE" OR "CROSS" CONFIGURATIONS.

2) U-CLIP MAY BE INSTALLED HORIZONTALLY (SHOWN) OR VERTICALLY.

## DETAIL F:
MULLION ATTACHED TO
STEEL STUD
(STANDARD CLIP SHOWN)

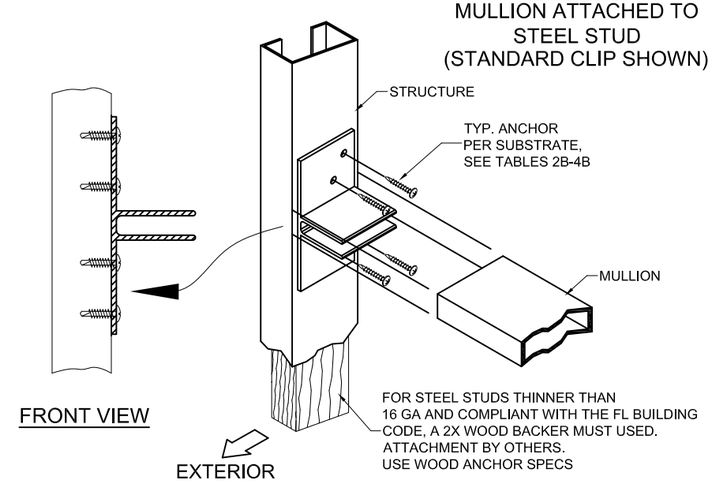


NOTES FOR INSTALLATION OPTION F:

1) FOR 2X WOOD-BACKED STEEL STUDS, WOOD ANCHOR VALUES MAY BE USED.

| Rev. | Date | |
|---|---|---|
| D | 10/13/23 | NO CHANGES, THIS SHEET. SB |


PREPARED BY A. LYNN MILLER
1070 TECHNOLOGY DRIVE
N. VENICE, FL 34275
(941) 480-1600


REGISTRATION #29296


COPYRIGHT © 2023 PGT, INC., LIMITED LICENSE
TO MAKE COPIES FOR PERMITTING.



PGT
Custom Windows and Doors
1070 TECHNOLOGY DRIVE
N. VENICE, FL 34275
(941) 480-1600


| Series | Desc. | Title | Sheet | DWG No. | Drawn By | Date |
|---|---|---|---|---|---|---|
| 5400/5500 | 5 OF 9 | 5400/5500 SERIES ALUMINUM TUBE MULLIONS | | 5XMULLS-FPA | J ROSOWSKI | 02/03/15 |

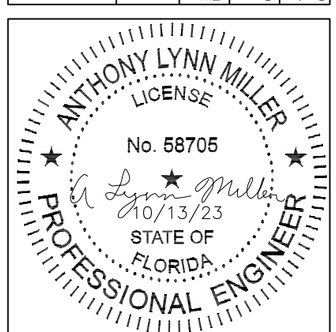


A. LYNN MILLER, P.E.
P.E.# 58705

USE THIS SHEET FOR CLIPPED MULLIONS

TABLE 2A

**Mullion Capacity Table (lbs/ft$^2$)**

| 1.25 x 3.25 x .100 Alum. Tube Mullion | Opening Width (for vertically-spanning mullions) or Opening Height (for horizontally-spanning mullions) | | | | | | | | | | | | | | | | | | | | | | | | | | | | | | | | | | | |
|---|---|---|---|---|---|---|---|---|---|---|---|---|---|---|---|---|---|---|---|---|---|---|---|---|---|---|---|---|---|---|---|---|---|---|---|---|
| | 50 in | | | | 60 in | | | | 70 in | | | | 80 in | | | | 90 in | | | | 100 in | | | | 120 in | | | | 140 in | | | | 160 in | | | |
| | Rectangular Loading | | Trap/Triang. Loading | | Rectangular Loading | | Trap/Triang. Loading | | Rectangular Loading | | Trap/Triang. Loading | | Rectangular Loading | | Trap/Triang. Loading | | Rectangular Loading | | Trap/Triang. Loading | | Rectangular Loading | | Trap/Triang. Loading | | Rectangular Loading | | Trap/Triang. Loading | | Rectangular Loading | | Trap/Triang. Loading | | Rectangular Loading | | Trap/Triang. Loading | |
| Mullion Length | Mullion Capacity (lbs/ft$^2$) | Anchor Capacity Required (lbs) | Mullion Capacity (lbs/ft$^2$) | Anchor Capacity Required (lbs) | Mullion Capacity (lbs/ft$^2$) | Anchor Capacity Required (lbs) | Mullion Capacity (lbs/ft$^2$) | Anchor Capacity Required (lbs) | Mullion Capacity (lbs/ft$^2$) | Anchor Capacity Required (lbs) | Mullion Capacity (lbs/ft$^2$) | Anchor Capacity Required (lbs) | Mullion Capacity (lbs/ft$^2$) | Anchor Capacity Required (lbs) | Mullion Capacity (lbs/ft$^2$) | Anchor Capacity Required (lbs) | Mullion Capacity (lbs/ft$^2$) | Anchor Capacity Required (lbs) | Mullion Capacity (lbs/ft$^2$) | Anchor Capacity Required (lbs) | Mullion Capacity (lbs/ft$^2$) | Anchor Capacity Required (lbs) | Mullion Capacity (lbs/ft$^2$) | Anchor Capacity Required (lbs) | Mullion Capacity (lbs/ft$^2$) | Anchor Capacity Required (lbs) | Mullion Capacity (lbs/ft$^2$) | Anchor Capacity Required (lbs) | Mullion Capacity (lbs/ft$^2$) | Anchor Capacity Required (lbs) | Mullion Capacity (lbs/ft$^2$) | Anchor Capacity Required (lbs) | Mullion Capacity (lbs/ft$^2$) | Anchor Capacity Required (lbs) | Mullion Capacity (lbs/ft$^2$) | Anchor Capacity Required (lbs) |
| 42 in | 70.0 | 255 | 70.0 | 179 | 70.0 | 306 | 70.0 | 197 | 70.0 | 357 | 70.0 | 208 | 70.0 | 408 | 70.0 | 214 | 70.0 | 459 | 70.0 | 214 | 70.0 | 510 | 70.0 | 214 | 70.0 | 613 | 70.0 | 214 | 70.0 | 715 | 70.0 | 214 | 70.0 | 817 | 70.0 | 214 |
| 48 in | 70.0 | 292 | 70.0 | 216 | 70.0 | 350 | 70.0 | 241 | 70.0 | 408 | 70.0 | 259 | 70.0 | 467 | 70.0 | 272 | 70.0 | 525 | 70.0 | 279 | 70.0 | 583 | 70.0 | 280 | 70.0 | 700 | 70.0 | 280 | 70.0 | 817 | 70.0 | 280 | 70.0 | 933 | 70.0 | 280 |
| 50.625 in | 70.0 | 308 | 70.0 | 232 | 70.0 | 369 | 70.0 | 260 | 70.0 | 431 | 70.0 | 282 | 70.0 | 492 | 70.0 | 298 | 70.0 | 554 | 70.0 | 308 | 70.0 | 615 | 70.0 | 311 | 70.0 | 738 | 70.0 | 311 | 70.0 | 861 | 70.0 | 311 | 65.9 | 927 | 70.0 | 311 |
| 54 in | 70.0 | 328 | 70.0 | 252 | 70.0 | 394 | 70.0 | 284 | 70.0 | 459 | 70.0 | 311 | 70.0 | 525 | 70.0 | 331 | 70.0 | 591 | 70.0 | 345 | 70.0 | 656 | 70.0 | 352 | 70.0 | 788 | 70.0 | 354 | 66.2 | 869 | 70.0 | 354 | 57.9 | 869 | 70.0 | 354 |
| 60 in | 70.0 | 365 | 70.0 | 289 | 70.0 | 438 | 70.0 | 328 | 70.0 | 510 | 70.0 | 362 | 70.0 | 583 | 70.0 | 389 | 70.0 | 656 | 70.0 | 410 | 70.0 | 729 | 70.0 | 425 | 59.7 | 746 | 70.0 | 438 | 51.2 | 746 | 70.0 | 438 | 44.8 | 746 | 70.0 | 438 |
| 63 in | 70.0 | 383 | 70.0 | 307 | 70.0 | 459 | 70.0 | 350 | 70.0 | 536 | 70.0 | 387 | 70.0 | 613 | 70.0 | 418 | 68.7 | 677 | 70.0 | 443 | 61.9 | 677 | 70.0 | 462 | 51.6 | 677 | 70.0 | 481 | 44.2 | 677 | 70.0 | 482 | 38.7 | 677 | 70.0 | 482 |
| 66 in | 70.0 | 401 | 70.0 | 325 | 70.0 | 481 | 70.0 | 372 | 70.0 | 561 | 70.0 | 413 | 67.3 | 617 | 70.0 | 447 | 59.8 | 617 | 70.0 | 476 | 53.8 | 617 | 68.7 | 489 | 44.8 | 617 | 64.4 | 483 | 38.4 | 617 | 63.7 | 482 | 33.6 | 617 | 63.7 | 482 |
| 72 in | 70.0 | 438 | 70.0 | 362 | 69.1 | 518 | 70.0 | 416 | 59.2 | 518 | 65.2 | 432 | 51.8 | 518 | 58.8 | 425 | 46.1 | 518 | 54.2 | 419 | 41.4 | 518 | 50.7 | 414 | 34.5 | 518 | 46.6 | 408 | 29.6 | 518 | 45.0 | 405 | 25.9 | 518 | 45.0 | 405 |
| 76 in | 70.0 | 462 | 70.0 | 386 | 58.7 | 465 | 62.6 | 398 | 50.3 | 465 | 54.9 | 390 | 44.1 | 465 | 49.4 | 384 | 39.2 | 465 | 45.3 | 378 | 35.2 | 465 | 42.2 | 374 | 29.4 | 465 | 38.3 | 367 | 25.2 | 465 | 36.5 | 364 | 22.0 | 465 | 36.2 | 363 |
| 78 in | 65.2 | 441 | 68.0 | 387 | 54.3 | 441 | 57.7 | 379 | 46.6 | 441 | 50.6 | 372 | 40.8 | 441 | 45.4 | 366 | 36.2 | 441 | 41.6 | 360 | 32.6 | 441 | 38.7 | 356 | 27.2 | 441 | 34.9 | 349 | 23.3 | 441 | 33.1 | 346 | 20.4 | 441 | 32.7 | 345 |
| 90 in | 42.4 | 332 | 43.8 | 295 | 35.4 | 332 | 37.0 | 289 | 30.3 | 332 | 32.3 | 284 | 26.5 | 332 | 28.8 | 280 | 23.6 | 332 | 26.1 | 276 | 21.2 | 332 | 24.1 | 272 | 17.7 | 332 | 21.3 | 266 | 15.2 | 332 | 19.6 | 262 | 13.3 | 332 | 18.7 | 260 |
| 96 in | 35.0 | 291 | 35.9 | 260 | 29.1 | 291 | 30.3 | 256 | 25.0 | 291 | 26.4 | 252 | 21.9 | 291 | 23.5 | 248 | 19.4 | 291 | 21.3 | 244 | 17.5 | 291 | 19.5 | 241 | 14.6 | 291 | 17.1 | 236 | 12.5 | 291 | 15.6 | 232 | | | | |
| 108 in | 24.6 | 230 | 25.1 | 208 | 20.5 | 230 | 21.1 | 205 | 17.5 | 230 | 18.3 | 201 | 15.4 | 230 | 16.2 | 198 | | | | | | | | | | | | | | | | | | | | |
| 111 in | 22.6 | 218 | 23.1 | 197 | 18.9 | 218 | 19.4 | 194 | 16.2 | 218 | 16.8 | 191 | 14.1 | 218 | 14.9 | 188 | | | | | | | | | | | | | | | | | | | | |
| 120 in | 17.9 | 187 | 18.2 | 170 | 14.9 | 187 | 15.3 | 167 | | | | | | | | | | | | | | | | | | | | | | | | | | | | |

ALL MULLIONS ON THIS APPROVAL ARE RATED TO THE AAMA 450-10 STANDARD.

USE RECTANGULAR LOADING FOR ALL TEE OR CROSS CONFIGURATIONS, AND ALL ASSEMBLIES CONTAINING A SINGLE/DOUBLE HUNG WINDOW.

USE TRAPEZOIDAL /TRIANGULAR LOADING FOR ALL OTHERS.

**ANCHOR CAPACITY ADJUSTMENT FORMULA:**

$$(DP_{REQ}) \times \left(\frac{\text{ANCHOR CAP.}_{\text{FROM TABLE}}}{\text{MULLION CAP.}_{\text{FROM TABLE}}}\right) = \text{ANCHOR CAP.}_{\text{REQ.}}$$

USE THIS FORMULA TO OBTAIN THE "ANCHOR CAPACITY REQUIRED" CORRESPONDING TO AN ACTUAL PRESSURE REQUIREMENT FOR THE OPENING, WHEN IT IS LOWER THAN THE MULLION CAPACITY (FROM THE TABLE) OF THE SELECTED MULLION. IT WILL YIELD A MINIMUM ANCHOR CAPACITY WHICH MAY BE USED TO QUALIFY ADDITIONAL ANCHOR OPTIONS FROM THE ANCHOR CAPACITY TABLE.

TABLE 2B

| Anchor Capacity (lbs) | | | | | | | | | | | | | | | |
|---|---|---|---|---|---|---|---|---|---|---|---|---|---|---|---|
| Substrate: | 3k Concrete | | | | 3.5k Conc. | | | | | | | Filled CMU | PT Wood | | Metal |
| Anchor Type: | 3/16" DeWalt Ultracon+ | | 1/4" DeWalt Ultracon+ | | 5/16" Elco Ultracon | 3/16" DeWalt Ultracon+ | | 1/4" DeWalt Ultracon+ | | 1/4" SS Elco AggreGator | 5/16" Elco Ultracon | 1/4" SS Elco AggreGator | #10 Steel Screw (G5) | #12 Steel Screw (G5) | #12 Steel Screw (G5) |
| Edge Distance (in): | 1" | 2-1/2" | 1" | 2-1/2" | 3-1/8" | 1" | 2-1/2" | 1" | 2-1/2" | 2" | 3-1/8" | 2" | 0.48" | 0.54" | 0.324" |
| Embedment (in): | 1-3/4" | 1-3/4" | 1-3/4" | 1-3/4" | 2" | 1-1/4" | 1-1/4" | 1-1/4" | 1-1/4" | 1-1/4" | 1-1/4" | 2" | 1-3/8" | 1-3/8" | varies |
| 2 Anchors @ 4.75" Min. O.C. / Standard or Offset Clip (Fig. 1): | 310 lbs | 630 lbs | 220 lbs | 870 lbs | 1644 lbs | 230 lbs | 370 lbs | 320 lbs | 580 lbs | 374 lbs | 664 lbs | 946 lbs | 341 lbs | 442 lbs | 560 lbs |
| 4 Anchors @ 1.15" Min. O.C. / Standard (or Offset) Clip (Fig. 2): | 320 lbs | 1260 lbs | 370 lbs | N/A | N/A | N/A | 740 lbs | N/A | N/A | N/A | N/A | N/A | 682 lbs | 885 lbs | 1120 lbs |
| 4 Anchors @ 3" Min. O.C. / (2) 2x5 Angle Clips / (Fig. 3): | 620 lbs | 1260 lbs | 440 lbs | 1740 lbs | 1896 lbs | 460 lbs | 740 lbs | 640 lbs | 1160 lbs | 748 lbs | 880 lbs | 1892 lbs | 682 lbs | 885 lbs | 1120 lbs |
| 3 Anchors @ 0.54" Min. O.C. / U-Clip, into .100" Alum. (Fig. 4): | N/A | N/A | N/A | N/A | N/A | N/A | N/A | N/A | N/A | N/A | N/A | N/A | N/A | N/A | 950 lbs |
| 1 Anchor / F-Clip (Fig. 5): | 155 lbs | 315 lbs | 110 lbs | 435 lbs | 822 lbs | 115 lbs | 185 lbs | 160 lbs | 290 lbs | 187 lbs | 332 lbs | 473 lbs | 170 lbs | 221 lbs | 280 lbs |
| 2 Anchors @ 1.15" Min. O.C./ F-Clip (Fig. 6): | 160 lbs | 630 lbs | 185 lbs | N/A | N/A | N/A | 370 lbs | N/A | N/A | N/A | N/A | N/A | 341 lbs | 442 lbs | 560 lbs |

NOTE: FOR THE OFFSET CLIP, USE THE SAME ANCHOR PATTERN AND ANCHOR VALUES AS THE STANDARD CLIP.

FIGURE 1, (STANDARD CLIP SHOWN):

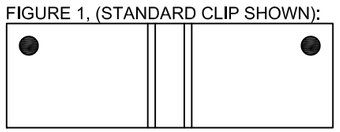

FIGURE 2, (STANDARD CLIP SHOWN):

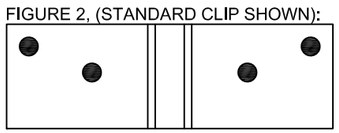

FIGURE 3:

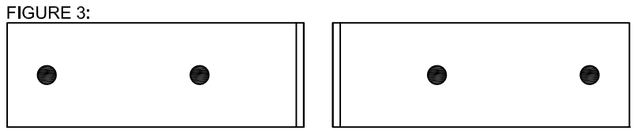

ANGLE CLIP MUST BE USED IN PAIRS.

FIGURE 4:

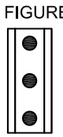

FIGURE 5:

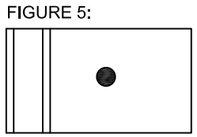

FIGURE 6:

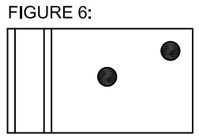

TABLE NOTES:

1) SEE SHEET 9 FOR INSTRUCTIONS ON USING THE TABLES. SEE SHEETS 3-5 FOR GENERAL INSTALLATION METHODS.

2) LINEAR INTERPOLATION BETWEEN MULL LENGTHS AND/OR OPENING WIDTHS IS ALLOWABLE.

3) MULLION AND MULLION CLIPS SHOWN ARE NOT TO SCALE. FOR EXACT DIMENSIONS, SEE SHEET 9. HOLES TO BE DRILLED IN THE FIELD FOLLOWING DIMENSIONAL RESTRICTIONS SHOWN ON SHEET 9. FIGURES SHOW SUGGESTED, APPROXIMATE HOLE LOCATIONS.

4) SUBSTRATES: CONCRETE SHALL CONFORM TO ACI 301 SPECIFICATIONS. HOLLOW AND GROUT-FILLED CONCRETE BLOCK UNIT (CMU) SHALL CONFORM TO ASTM C-90. WOOD SHALL BE PRESSURE-TREATED YELLOW SOUTHERN PINE WITH AN SG OF 0.55. ALUMINUM SHALL BE 6063-T5 AND BE A MINIMUM OF .100" THICK. STEEL STUDS TO BE A MINIMUM GRADE 33 AND .045" THICK (18 GAUGE). STRUCTURAL STEEL TO BE AT LEAST .125" THICK AND A36. ALL ANCHORS INTO METAL SHALL EXTEND AT LEAST 3 SCREW THREADS BEYOND THE MATERIAL. #10 & #12 ANCHORS INTO WOOD MAY BE STEEL, 18-8 S.S. OR 410 S.S.

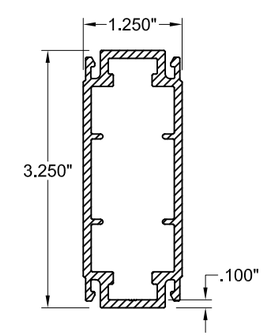


1.25" X 3.25" X .100" MULLION

| Rev. # | Date | Rev. |
|---|---|---|
| D | 10/13/23 | DELETE 1/4" & 3/16" ULTRACONS. SB |


PREPARED BY A. LYNN MILLER
1070 TECHNOLOGY DRIVE
N. VENICE, FL 34275
(941) 480-1600


REGISTRATION #29296


COPYRIGHT © 2023 PGT, INC., LIMITED LICENSE TO MAKE COPIES FOR PERMITTING.



PGT Custom Windows and Doors
1070 TECHNOLOGY DRIVE
N. VENICE, FL 34275
(941) 480-1600


| Title | Date | Drawn By | DWG No. | Sheet |
|---|---|---|---|---|
| 5400/5500 SERIES ALUMINUM TUBE MULLIONS | 02/03/15 | J ROSOWSKI | 5XMULLS-FPA | 6 OF 9 |

Desc.: 1.25 X 3.25 X .100 MULL SPECS

Series: 5400/5500

ANTHONY LYNN MILLER
LICENSE
No. 58705
A. Lynn Miller
10/13/23
STATE OF FLORIDA
PROFESSIONAL ENGINEER

A. LYNN MILLER, P.E.
P.E.# 58705

USE THIS SHEET FOR CLIPPED MULLIONS

TABLE 3A

**Mullion Capacity Table (lbs/ft$^2$)**

| 1.25 x 3.25 x .624 Alum. Tube Mullion | **Opening Width** (for vertically-spanning mullions) **or Opening Height** (for horizontally-spanning mullions) | | | | | | | | | | | | | | | | | | | | | | | | | | | | | | | | | | | |
|---|---|---|---|---|---|---|---|---|---|---|---|---|---|---|---|---|---|---|---|---|---|---|---|---|---|---|---|---|---|---|---|---|---|---|---|---|
| | 50 in | | | | 60 in | | | | 70 in | | | | 80 in | | | | 90 in | | | | 100 in | | | | 120 in | | | | 140 in | | | | 160 in | | | |
| | Rectangular Loading | | Trap/Triang. Loading | | Rectangular Loading | | Trap/Triang. Loading | | Rectangular Loading | | Trap/Triang. Loading | | Rectangular Loading | | Trap/Triang. Loading | | Rectangular Loading | | Trap/Triang. Loading | | Rectangular Loading | | Trap/Triang. Loading | | Rectangular Loading | | Trap/Triang. Loading | | Rectangular Loading | | Trap/Triang. Loading | | Rectangular Loading | | Trap/Triang. Loading | |
| Mullion Length | Mullion Capacity (lbs/ft$^2$) | Anchor Capacity Required (lbs) | Mullion Capacity (lbs/ft$^2$) | Anchor Capacity Required (lbs) | Mullion Capacity (lbs/ft$^2$) | Anchor Capacity Required (lbs) | Mullion Capacity (lbs/ft$^2$) | Anchor Capacity Required (lbs) | Mullion Capacity (lbs/ft$^2$) | Anchor Capacity Required (lbs) | Mullion Capacity (lbs/ft$^2$) | Anchor Capacity Required (lbs) | Mullion Capacity (lbs/ft$^2$) | Anchor Capacity Required (lbs) | Mullion Capacity (lbs/ft$^2$) | Anchor Capacity Required (lbs) | Mullion Capacity (lbs/ft$^2$) | Anchor Capacity Required (lbs) | Mullion Capacity (lbs/ft$^2$) | Anchor Capacity Required (lbs) | Mullion Capacity (lbs/ft$^2$) | Anchor Capacity Required (lbs) | Mullion Capacity (lbs/ft$^2$) | Anchor Capacity Required (lbs) | Mullion Capacity (lbs/ft$^2$) | Anchor Capacity Required (lbs) | Mullion Capacity (lbs/ft$^2$) | Anchor Capacity Required (lbs) | Mullion Capacity (lbs/ft$^2$) | Anchor Capacity Required (lbs) | Mullion Capacity (lbs/ft$^2$) | Anchor Capacity Required (lbs) | Mullion Capacity (lbs/ft$^2$) | Anchor Capacity Required (lbs) | Mullion Capacity (lbs/ft$^2$) | Anchor Capacity Required (lbs) |
| 42 in | 70.0 | 255 | 70.0 | 179 | 70.0 | 306 | 70.0 | 197 | 70.0 | 357 | 70.0 | 208 | 70.0 | 408 | 70.0 | 214 | 70.0 | 459 | 70.0 | 214 | 70.0 | 510 | 70.0 | 214 | 70.0 | 613 | 70.0 | 214 | 70.0 | 715 | 70.0 | 214 | 70.0 | 817 | 70.0 | 214 |
| 48 in | 70.0 | 292 | 70.0 | 216 | 70.0 | 350 | 70.0 | 241 | 70.0 | 408 | 70.0 | 259 | 70.0 | 467 | 70.0 | 272 | 70.0 | 525 | 70.0 | 279 | 70.0 | 583 | 70.0 | 280 | 70.0 | 700 | 70.0 | 280 | 70.0 | 817 | 70.0 | 280 | 70.0 | 933 | 70.0 | 280 |
| 50.625 in | 70.0 | 308 | 70.0 | 232 | 70.0 | 369 | 70.0 | 260 | 70.0 | 431 | 70.0 | 282 | 70.0 | 492 | 70.0 | 298 | 70.0 | 554 | 70.0 | 308 | 70.0 | 615 | 70.0 | 311 | 70.0 | 738 | 70.0 | 311 | 70.0 | 861 | 70.0 | 311 | 70.0 | 984 | 70.0 | 311 |
| 54 in | 70.0 | 328 | 70.0 | 252 | 70.0 | 394 | 70.0 | 284 | 70.0 | 459 | 70.0 | 311 | 70.0 | 525 | 70.0 | 331 | 70.0 | 591 | 70.0 | 345 | 70.0 | 656 | 70.0 | 352 | 70.0 | 788 | 70.0 | 354 | 70.0 | 919 | 70.0 | 354 | 70.0 | 1050 | 70.0 | 354 |
| 60 in | 70.0 | 365 | 70.0 | 289 | 70.0 | 438 | 70.0 | 328 | 70.0 | 510 | 70.0 | 362 | 70.0 | 583 | 70.0 | 389 | 70.0 | 656 | 70.0 | 410 | 70.0 | 729 | 70.0 | 425 | 70.0 | 875 | 70.0 | 438 | 70.0 | 1021 | 70.0 | 438 | 70.0 | 1167 | 70.0 | 438 |
| 63 in | 70.0 | 383 | 70.0 | 307 | 70.0 | 459 | 70.0 | 350 | 70.0 | 536 | 70.0 | 387 | 70.0 | 613 | 70.0 | 418 | 70.0 | 689 | 70.0 | 443 | 70.0 | 766 | 70.0 | 462 | 70.0 | 919 | 70.0 | 481 | 70.0 | 1072 | 70.0 | 482 | 70.0 | 1225 | 70.0 | 482 |
| 66 in | 70.0 | 401 | 70.0 | 325 | 70.0 | 481 | 70.0 | 372 | 70.0 | 561 | 70.0 | 413 | 70.0 | 642 | 70.0 | 447 | 70.0 | 722 | 70.0 | 476 | 70.0 | 802 | 70.0 | 498 | 70.0 | 963 | 70.0 | 525 | 70.0 | 1123 | 70.0 | 529 | 68.1 | 1248 | 70.0 | 529 |
| 72 in | 70.0 | 438 | 70.0 | 362 | 70.0 | 525 | 70.0 | 416 | 70.0 | 613 | 70.0 | 464 | 70.0 | 700 | 70.0 | 506 | 70.0 | 788 | 70.0 | 541 | 70.0 | 875 | 70.0 | 571 | 69.9 | 1049 | 70.0 | 613 | 59.9 | 1049 | 70.0 | 630 | 52.4 | 1049 | 70.0 | 630 |
| 76 in | 70.0 | 462 | 70.0 | 386 | 70.0 | 554 | 70.0 | 445 | 70.0 | 647 | 70.0 | 498 | 70.0 | 739 | 70.0 | 544 | 70.0 | 831 | 70.0 | 585 | 70.0 | 924 | 70.0 | 620 | 59.5 | 941 | 70.0 | 671 | 51.0 | 941 | 70.0 | 698 | 44.6 | 941 | 70.0 | 702 |
| 78 in | 70.0 | 474 | 70.0 | 398 | 70.0 | 569 | 70.0 | 459 | 70.0 | 664 | 70.0 | 515 | 70.0 | 758 | 70.0 | 564 | 70.0 | 853 | 70.0 | 607 | 66.0 | 894 | 70.0 | 644 | 55.0 | 894 | 70.0 | 700 | 47.1 | 894 | 67.0 | 701 | 41.3 | 894 | 66.1 | 698 |
| 90 in | 70.0 | 547 | 70.0 | 471 | 70.0 | 656 | 70.0 | 547 | 61.4 | 671 | 65.3 | 575 | 53.7 | 671 | 58.2 | 566 | 47.7 | 671 | 52.9 | 558 | 43.0 | 671 | 48.8 | 551 | 35.8 | 671 | 43.1 | 539 | 30.7 | 671 | 39.7 | 531 | 26.9 | 671 | 37.9 | 526 |
| 96 in | 70.0 | 583 | 70.0 | 507 | 59.0 | 590 | 61.4 | 518 | 50.6 | 590 | 53.4 | 509 | 44.3 | 590 | 47.5 | 502 | 39.3 | 590 | 43.0 | 494 | 35.4 | 590 | 39.6 | 488 | 29.5 | 590 | 34.7 | 477 | 25.3 | 590 | 31.6 | 469 | | | | |
| 108 in | 49.7 | 466 | 50.8 | 421 | 41.4 | 466 | 42.8 | 414 | 35.5 | 466 | 37.1 | 408 | 31.1 | 466 | 32.9 | 402 | | | | | | | | | | | | | | | | | | | | |
| 111 in | 45.8 | 441 | 46.7 | 400 | 38.2 | 441 | 39.3 | 393 | 32.7 | 441 | 34.1 | 387 | 28.6 | 441 | 30.2 | 382 | | | | | | | | | | | | | | | | | | | | |
| 120 in | 36.3 | 378 | 36.9 | 344 | 30.2 | 378 | 31.0 | 339 | | | | | | | | | | | | | | | | | | | | | | | | | | | | |

ALL MULLIONS ON THIS APPROVAL ARE RATED TO THE AAMA 450-10 STANDARD.

USE RECTANGULAR LOADING FOR ALL TEE OR CROSS CONFIGURATIONS, AND ALL ASSEMBLIES CONTAINING A SINGLE/DOUBLE HUNG WINDOW.

USE TRAPEZOIDAL /TRIANGULAR LOADING FOR ALL OTHERS.

**ANCHOR CAPACITY ADJUSTMENT FORMULA:**

$$(DP_{REQ.}) \times \left(\frac{\text{ANCHOR CAP.}_{\text{FROM TABLE}}}{\text{MULLION CAP.}_{\text{FROM TABLE}}}\right) = \text{ANCHOR CAP.}_{\text{REQ.}}$$

USE THIS FORMULA TO OBTAIN THE "ANCHOR CAPACITY REQUIRED" CORRESPONDING TO AN ACTUAL PRESSURE REQUIREMENT FOR THE OPENING, WHEN IT IS LOWER THAN THE MULLION CAPACITY (FROM THE TABLE) OF THE SELECTED MULLION. IT WILL YIELD A MINIMUM ANCHOR CAPACITY WHICH MAY BE USED TO QUALIFY ADDITIONAL ANCHOR OPTIONS FROM THE ANCHOR CAPACITY TABLE.

TABLE 3B

| **Anchor Capacity (lbs)** | | | | | | | | | | | | | | | |
|---|---|---|---|---|---|---|---|---|---|---|---|---|---|---|---|
| | Substrate: | 3k Concrete | | | | 3.5k Conc. | | | | | | Filled CMU | PT Wood | | Metal |
| | Anchor Type: | 3/16" DeWalt Ultracon+ | | 1/4" DeWalt Ultracon+ | | 5/16" Elco Ultracon | 3/16" DeWalt Ultracon+ | | 1/4" DeWalt Ultracon+ | | 1/4" SS Elco AggreGator | 5/16" Elco Ultracon | 1/4" SS Elco AggreGator | #10 Steel Screw (G5) | #12 Steel Screw (G5) | #12 Steel Screw (G5) |
| | Edge Distance (in): | 1" | 2-1/2" | 1" | 2-1/2" | 3-1/8" | 1" | 2-1/2" | 1" | 2-1/2" | 2" | 3-1/8" | 2" | 0.48" | 0.54" | 0.324" |
| | Embedment (in): | 1-3/4" | 1-3/4" | 1-3/4" | 1-3/4" | 2" | 1-1/4" | 1-1/4" | 1-1/4" | 1-1/4" | 1-1/4" | 1-1/4" | 2" | 1-3/8" | 1-3/8" | varies |
| 2 Anchors @ 4.75" Min. O.C. / Standard or Offset Clip (Fig. 1): | | 310 lbs | 630 lbs | 220 lbs | 870 lbs | 1644 lbs | 230 lbs | 370 lbs | 320 lbs | 580 lbs | 374 lbs | 664 lbs | 946 lbs | 341 lbs | 442 lbs | 560 lbs |
| 4 Anchors @ 1.15" Min. O.C. / Standard (or Offset) Clip (Fig. 2): | | 320 lbs | 1260 lbs | 370 lbs | N/A | N/A | N/A | 740 lbs | N/A | N/A | N/A | N/A | N/A | 682 lbs | 885 lbs | 1120 lbs |
| 4 Anchors @ 3" Min. O.C. / (2) 2x5 Angle Clips / (Fig. 3): | | 620 lbs | 1260 lbs | 440 lbs | 1740 lbs | 1896 lbs | 460 lbs | 740 lbs | 640 lbs | 1160 lbs | 748 lbs | 880 lbs | 1892 lbs | 682 lbs | 885 lbs | 1120 lbs |
| 3 Anchors @ 0.54" Min. O.C. / U-Clip, into .100" Alum. (Fig. 4): | | N/A | N/A | N/A | N/A | N/A | N/A | N/A | N/A | N/A | N/A | N/A | N/A | N/A | N/A | 950 lbs |
| 1 Anchor / F-Clip (Fig. 5): | | 155 lbs | 315 lbs | 110 lbs | 435 lbs | 822 lbs | 115 lbs | 185 lbs | 160 lbs | 290 lbs | 187 lbs | 332 lbs | 473 lbs | 170 lbs | 221 lbs | 280 lbs |
| 2 Anchors @ 1.15" Min. O.C./ F-Clip (Fig. 6): | | 160 lbs | 630 lbs | 185 lbs | N/A | N/A | N/A | 370 lbs | N/A | N/A | N/A | N/A | N/A | 341 lbs | 442 lbs | 560 lbs |

NOTE: FOR THE OFFSET CLIP, USE THE SAME ANCHOR PATTERN AND ANCHOR VALUES AS THE STANDARD CLIP.

FIGURE 1, (STANDARD CLIP SHOWN):

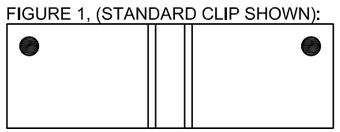

FIGURE 2, (STANDARD CLIP SHOWN):

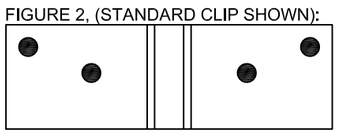

FIGURE 3:

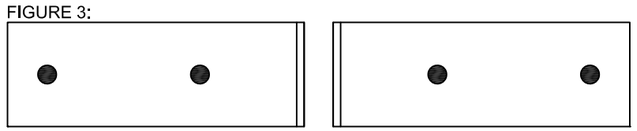

ANGLE CLIP MUST BE USED IN PAIRS.

FIGURE 4:

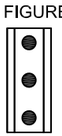

FIGURE 5:

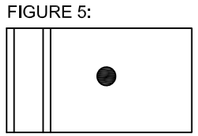

FIGURE 6:

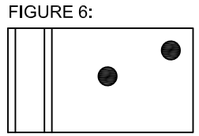

TABLE NOTES:

1) SEE SHEET 9 FOR INSTRUCTIONS ON USING THE TABLES. SEE SHEETS 3-5 FOR GENERAL INSTALLATION METHODS.

2) LINEAR INTERPOLATION BETWEEN MULL LENGTHS AND/OR OPENING WIDTHS IS ALLOWABLE.

3) MULLION AND MULLION CLIPS SHOWN ARE NOT TO SCALE. FOR EXACT DIMENSIONS, SEE SHEET 9. HOLES TO BE DRILLED IN THE FIELD FOLLOWING DIMENSIONAL RESTRICTIONS SHOWN ON SHEET 9. FIGURES SHOW SUGGESTED, APPROXIMATE HOLE LOCATIONS.

4) SUBSTRATES: CONCRETE SHALL CONFORM TO ACI 301 SPECIFICATIONS. HOLLOW AND GROUT-FILLED CONCRETE BLOCK UNIT (CMU) SHALL CONFORM TO ASTM C-90. WOOD SHALL BE PRESSURE-TREATED YELLOW SOUTHERN PINE WITH AN SG OF 0.55. ALUMINUM SHALL BE 6063-T5 AND BE A MINIMUM OF .100" THICK. STEEL STUDS TO BE A MINIMUM GRADE 33 AND .045" THICK (18 GAUGE). STRUCTURAL STEEL TO BE AT LEAST .125" THICK AND A36. ALL ANCHORS INTO METAL SHALL EXTEND AT LEAST 3 SCREW THREADS BEYOND THE MATERIAL. #10 & #12 ANCHORS INTO WOOD MAY BE STEEL, 18-8 S.S. OR 410 S.S.

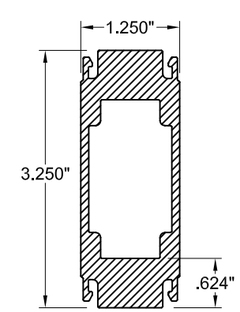


1.25" X 3.25" X .624" MULLION

| Rev.# | Date | Rev. |
|---|---|---|
| D | 10/13/23 | DELETE 1/4" & 3/16" ULTRACONS. SB |


PREPARED BY A. LYNN MILLER
1070 TECHNOLOGY DRIVE
N. VENICE, FL 34275
(941) 480-1600


REGISTRATION #29296


COPYRIGHT © 2023 PGT, INC., LIMITED LICENSE TO MAKE COPIES FOR PERMITTING.



PGT Custom Windows and Doors
1070 TECHNOLOGY DRIVE
N. VENICE, FL 34275
(941) 480-1600


| Series | Desc. | Title | Sheet | DWG No. | Drawn By | Date |
|---|---|---|---|---|---|---|
| 5400/5500 | 1.25 X 3.25 X .624 MULL SPECS | 5400/5500 SERIES ALUMINUM TUBE MULLIONS | 7 OF 9 | 5XMULLS-FPA | J ROSOWSKI | 02/03/15 |

ANTHONY LYNN MILLER
LICENSE
No. 58705
A. Lynn Miller
10/13/23
STATE OF FLORIDA
PROFESSIONAL ENGINEER

A. LYNN MILLER, P.E.
P.E.# 58705

USE THIS SHEET FOR CLIPPED MULLIONS

TABLE 4A

**Mullion Capacity Table (lbs/ft$^2$)**

| 1.25 x 3.94 x .624 Alum. Tube Mullion | Opening Width (for vertically-spanning mullions) or Opening Height (for horizontally-spanning mullions) | | | | | | | | | | | | | | | | | | | | | | | | | | | | | | | | | | | |
|---|---|---|---|---|---|---|---|---|---|---|---|---|---|---|---|---|---|---|---|---|---|---|---|---|---|---|---|---|---|---|---|---|---|---|---|---|
| | 50 in | | | | 60 in | | | | 70 in | | | | 80 in | | | | 90 in | | | | 100 in | | | | 120 in | | | | 140 in | | | | 160 in | | | |
| | Rectangular Loading | | Trap/Triang. Loading | | Rectangular Loading | | Trap/Triang. Loading | | Rectangular Loading | | Trap/Triang. Loading | | Rectangular Loading | | Trap/Triang. Loading | | Rectangular Loading | | Trap/Triang. Loading | | Rectangular Loading | | Trap/Triang. Loading | | Rectangular Loading | | Trap/Triang. Loading | | Rectangular Loading | | Trap/Triang. Loading | | Rectangular Loading | | Trap/Triang. Loading | |
| Mullion Length | Mullion Capacity (lbs/ft$^2$) | Anchor Capacity Required (lbs) | Mullion Capacity (lbs/ft$^2$) | Anchor Capacity Required (lbs) | Mullion Capacity (lbs/ft$^2$) | Anchor Capacity Required (lbs) | Mullion Capacity (lbs/ft$^2$) | Anchor Capacity Required (lbs) | Mullion Capacity (lbs/ft$^2$) | Anchor Capacity Required (lbs) | Mullion Capacity (lbs/ft$^2$) | Anchor Capacity Required (lbs) | Mullion Capacity (lbs/ft$^2$) | Anchor Capacity Required (lbs) | Mullion Capacity (lbs/ft$^2$) | Anchor Capacity Required (lbs) | Mullion Capacity (lbs/ft$^2$) | Anchor Capacity Required (lbs) | Mullion Capacity (lbs/ft$^2$) | Anchor Capacity Required (lbs) | Mullion Capacity (lbs/ft$^2$) | Anchor Capacity Required (lbs) | Mullion Capacity (lbs/ft$^2$) | Anchor Capacity Required (lbs) | Mullion Capacity (lbs/ft$^2$) | Anchor Capacity Required (lbs) | Mullion Capacity (lbs/ft$^2$) | Anchor Capacity Required (lbs) | Mullion Capacity (lbs/ft$^2$) | Anchor Capacity Required (lbs) | Mullion Capacity (lbs/ft$^2$) | Anchor Capacity Required (lbs) | Mullion Capacity (lbs/ft$^2$) | Anchor Capacity Required (lbs) | Mullion Capacity (lbs/ft$^2$) | Anchor Capacity Required (lbs) |
| 42 in | 70.0 | 255 | 70.0 | 179 | 70.0 | 306 | 70.0 | 197 | 70.0 | 357 | 70.0 | 208 | 70.0 | 408 | 70.0 | 214 | 70.0 | 459 | 70.0 | 214 | 70.0 | 510 | 70.0 | 214 | 70.0 | 613 | 70.0 | 214 | 70.0 | 715 | 70.0 | 214 | 70.0 | 817 | 70.0 | 214 |
| 48 in | 70.0 | 292 | 70.0 | 216 | 70.0 | 350 | 70.0 | 241 | 70.0 | 408 | 70.0 | 259 | 70.0 | 467 | 70.0 | 272 | 70.0 | 525 | 70.0 | 279 | 70.0 | 583 | 70.0 | 280 | 70.0 | 700 | 70.0 | 280 | 70.0 | 817 | 70.0 | 280 | 70.0 | 933 | 70.0 | 280 |
| 50.625 in | 70.0 | 308 | 70.0 | 232 | 70.0 | 369 | 70.0 | 260 | 70.0 | 431 | 70.0 | 282 | 70.0 | 492 | 70.0 | 298 | 70.0 | 554 | 70.0 | 308 | 70.0 | 615 | 70.0 | 311 | 70.0 | 738 | 70.0 | 311 | 70.0 | 861 | 70.0 | 311 | 70.0 | 984 | 70.0 | 311 |
| 54 in | 70.0 | 328 | 70.0 | 252 | 70.0 | 394 | 70.0 | 284 | 70.0 | 459 | 70.0 | 311 | 70.0 | 525 | 70.0 | 331 | 70.0 | 591 | 70.0 | 345 | 70.0 | 656 | 70.0 | 352 | 70.0 | 788 | 70.0 | 354 | 70.0 | 919 | 70.0 | 354 | 70.0 | 1050 | 70.0 | 354 |
| 60 in | 70.0 | 365 | 70.0 | 289 | 70.0 | 438 | 70.0 | 328 | 70.0 | 510 | 70.0 | 362 | 70.0 | 583 | 70.0 | 389 | 70.0 | 656 | 70.0 | 410 | 70.0 | 729 | 70.0 | 425 | 70.0 | 875 | 70.0 | 438 | 70.0 | 1021 | 70.0 | 438 | 70.0 | 1167 | 70.0 | 438 |
| 63 in | 70.0 | 383 | 70.0 | 307 | 70.0 | 459 | 70.0 | 350 | 70.0 | 536 | 70.0 | 387 | 70.0 | 613 | 70.0 | 418 | 70.0 | 689 | 70.0 | 443 | 70.0 | 766 | 70.0 | 462 | 70.0 | 919 | 70.0 | 481 | 70.0 | 1072 | 70.0 | 482 | 70.0 | 1225 | 70.0 | 482 |
| 66 in | 70.0 | 401 | 70.0 | 325 | 70.0 | 481 | 70.0 | 372 | 70.0 | 561 | 70.0 | 413 | 70.0 | 642 | 70.0 | 447 | 70.0 | 722 | 70.0 | 476 | 70.0 | 802 | 70.0 | 498 | 70.0 | 963 | 70.0 | 525 | 70.0 | 1123 | 70.0 | 529 | 70.0 | 1283 | 70.0 | 529 |
| 72 in | 70.0 | 438 | 70.0 | 362 | 70.0 | 525 | 70.0 | 416 | 70.0 | 613 | 70.0 | 464 | 70.0 | 700 | 70.0 | 506 | 70.0 | 788 | 70.0 | 541 | 70.0 | 875 | 70.0 | 571 | 70.0 | 1050 | 70.0 | 613 | 70.0 | 1225 | 70.0 | 630 | 70.0 | 1400 | 70.0 | 630 |
| 76 in | 70.0 | 462 | 70.0 | 386 | 70.0 | 554 | 70.0 | 445 | 70.0 | 647 | 70.0 | 498 | 70.0 | 739 | 70.0 | 544 | 70.0 | 831 | 70.0 | 585 | 70.0 | 924 | 70.0 | 620 | 70.0 | 1108 | 70.0 | 671 | 70.0 | 1293 | 70.0 | 698 | 70.0 | 1478 | 70.0 | 702 |
| 78 in | 70.0 | 474 | 70.0 | 398 | 70.0 | 569 | 70.0 | 459 | 70.0 | 664 | 70.0 | 515 | 70.0 | 758 | 70.0 | 564 | 70.0 | 853 | 70.0 | 607 | 70.0 | 948 | 70.0 | 644 | 70.0 | 1138 | 70.0 | 700 | 70.0 | 1327 | 70.0 | 732 | 68.2 | 1477 | 70.0 | 739 |
| 90 in | 70.0 | 547 | 70.0 | 471 | 70.0 | 656 | 70.0 | 547 | 70.0 | 766 | 70.0 | 617 | 70.0 | 875 | 70.0 | 681 | 70.0 | 984 | 70.0 | 738 | 70.0 | 1094 | 70.0 | 790 | 59.2 | 1110 | 70.0 | 875 | 50.7 | 1110 | 65.6 | 878 | 44.4 | 1110 | 62.7 | 870 |
| 96 in | 70.0 | 583 | 70.0 | 507 | 70.0 | 700 | 70.0 | 591 | 70.0 | 817 | 70.0 | 668 | 70.0 | 933 | 70.0 | 739 | 65.0 | 975 | 70.0 | 804 | 58.5 | 975 | 65.4 | 807 | 48.8 | 975 | 57.4 | 789 | 41.8 | 975 | 52.3 | 776 | | | | |
| 108 in | 70.0 | 656 | 70.0 | 580 | 68.5 | 771 | 70.0 | 678 | 58.7 | 771 | 61.3 | 674 | 51.4 | 771 | 54.3 | 664 | | | | | | | | | | | | | | | | | | | | |
| 111 in | 70.0 | 674 | 70.0 | 599 | 63.1 | 730 | 65.0 | 650 | 54.1 | 730 | 56.3 | 640 | 47.3 | 730 | 49.9 | 631 | | | | | | | | | | | | | | | | | | | | |
| 120 in | 59.9 | 624 | 61.0 | 569 | 49.9 | 624 | 51.2 | 560 | | | | | | | | | | | | | | | | | | | | | | | | | | | | |
| 144 in | 34.7 | 433 | 35.1 | 400 | 28.9 | 433 | 29.4 | 395 | | | | | | | | | | | | | | | | | | | | | | | | | | | | |

USE RECTANGULAR LOADING FOR ALL TEE OR CROSS CONFIGURATIONS, AND ALL ASSEMBLIES CONTAINING A SINGLE/DOUBLE HUNG WINDOW.

USE TRAPEZOIDAL /TRIANGULAR LOADING FOR ALL OTHERS.

**ANCHOR CAPACITY ADJUSTMENT FORMULA:**

$$(DP_{REQ}) \times \left(\frac{\text{ANCHOR CAP.}_{\text{FROM TABLE}}}{\text{MULLION CAP.}_{\text{FROM TABLE}}}\right) = \text{ANCHOR CAP.}_{\text{REQ.}}$$

USE THIS FORMULA TO OBTAIN THE "ANCHOR CAPACITY REQUIRED" CORRESPONDING TO AN ACTUAL PRESSURE REQUIREMENT FOR THE OPENING, WHEN IT IS LOWER THAN THE MULLION CAPACITY (FROM THE TABLE) OF THE SELECTED MULLION. IT WILL YIELD A MINIMUM ANCHOR CAPACITY WHICH MAY BE USED TO QUALIFY ADDITIONAL ANCHOR OPTIONS FROM THE ANCHOR CAPACITY TABLE.

ALL MULLIONS ON THIS APPROVAL ARE RATED TO THE AAMA 450-10 STANDARD.

TABLE 4B

| Anchor Capacity (lbs) | | | | | | | | | | | | | | | |
|---|---|---|---|---|---|---|---|---|---|---|---|---|---|---|---|
| Substrate: | 3k Concrete | | | | 3.5k Conc. | | | | | | | Filled CMU | PT Wood | | Metal |
| Anchor Type: | 3/16" DeWalt Ultracon+ | | 1/4" DeWalt Ultracon+ | | 5/16" Elco Ultracon | 3/16" DeWalt Ultracon+ | | 1/4" DeWalt Ultracon+ | | 1/4" SS Elco AggreGator | 5/16" Elco Ultracon | 1/4" SS Elco AggreGator | #10 Steel Screw (G5) | #12 Steel Screw (G5) | #12 Steel Screw (G5) |
| Edge Distance (in): | 1" | 2-1/2" | 1" | 2-1/2" | 3-1/8" | 1" | 2-1/2" | 1" | 2-1/2" | 2" | 3-1/8" | 2" | 0.48" | 0.54" | 0.324" |
| Embedment (in): | 1-3/4" | 1-3/4" | 1-3/4" | 1-3/4" | 2" | 1-1/4" | 1-1/4" | 1-1/4" | 1-1/4" | 1-1/4" | 1-1/4" | 2" | 1-3/8" | 1-3/8" | varies |
| 2 Anchors @ 4.75" Min. O.C. / Standard or Offset Clip (Fig. 1): | 310 lbs | 630 lbs | 220 lbs | 870 lbs | 1644 lbs | 230 lbs | 370 lbs | 320 lbs | 580 lbs | 374 lbs | 664 lbs | 946 lbs | 341 lbs | 442 lbs | 560 lbs |
| 4 Anchors @ 1.15" Min. O.C. / Standard (or Offset) Clip (Fig. 2): | 320 lbs | 1260 lbs | 370 lbs | N/A | N/A | N/A | 740 lbs | N/A | N/A | N/A | N/A | N/A | 682 lbs | 885 lbs | 1120 lbs |
| 4 Anchors @ 3" Min. O.C. / (2) 2x5 Angle Clips / (Fig. 3): | 620 lbs | 1260 lbs | 440 lbs | 1740 lbs | 1896 lbs | 460 lbs | 740 lbs | 640 lbs | 1160 lbs | 748 lbs | 880 lbs | 1892 lbs | 682 lbs | 885 lbs | 1120 lbs |
| 3 Anchors @ 0.54" Min. O.C. / U-Clip, into .100" Alum. (Fig. 4): | N/A | N/A | N/A | N/A | N/A | N/A | N/A | N/A | N/A | N/A | N/A | N/A | N/A | N/A | 950 lbs |
| 1 Anchor / F-Clip (Fig. 5): | 155 lbs | 315 lbs | 110 lbs | 435 lbs | 822 lbs | 115 lbs | 185 lbs | 160 lbs | 290 lbs | 187 lbs | 332 lbs | 473 lbs | 170 lbs | 221 lbs | 280 lbs |
| 2 Anchors @ 1.15" Min. O.C./ F-Clip (Fig. 6): | 160 lbs | 630 lbs | 185 lbs | N/A | N/A | N/A | 370 lbs | N/A | N/A | N/A | N/A | N/A | 341 lbs | 442 lbs | 560 lbs |

NOTE: FOR THE OFFSET CLIP, USE THE SAME ANCHOR PATTERN AND ANCHOR VALUES AS THE STANDARD CLIP.

FIGURE 1, (STANDARD CLIP SHOWN):

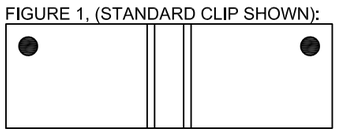

FIGURE 2, (STANDARD CLIP SHOWN):

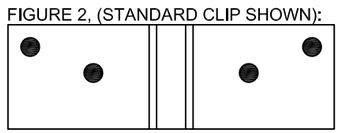

FIGURE 3:

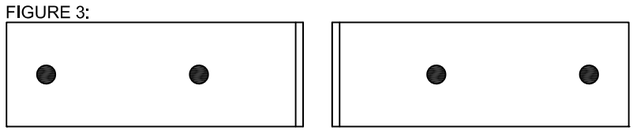

ANGLE CLIP MUST BE USED IN PAIRS.

FIGURE 4:

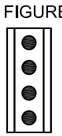

FIGURE 5:

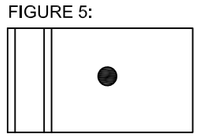

FIGURE 6:

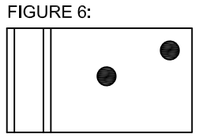

TABLE NOTES:

1) SEE SHEET 9 FOR INSTRUCTIONS ON USING THE TABLES. SEE SHEETS 3-5 FOR GENERAL INSTALLATION METHODS.

2) LINEAR INTERPOLATION BETWEEN MULL LENGTHS AND/OR OPENING WIDTHS IS ALLOWABLE.

3) MULLION AND MULLION CLIPS SHOWN ARE NOT TO SCALE. FOR EXACT DIMENSIONS, SEE SHEET 9. HOLES TO BE DRILLED IN THE FIELD FOLLOWING DIMENSIONAL RESTRICTIONS SHOWN ON SHEET 9. FIGURES SHOW SUGGESTED, APPROXIMATE HOLE LOCATIONS.

4) SUBSTRATES: CONCRETE SHALL CONFORM TO ACI 301 SPECIFICATIONS. HOLLOW AND GROUT-FILLED CONCRETE BLOCK UNIT (CMU) SHALL CONFORM TO ASTM C-90. WOOD SHALL BE PRESSURE-TREATED YELLOW SOUTHERN PINE WITH AN SG OF 0.55. ALUMINUM SHALL BE 6063-T5 AND BE A MINIMUM OF .100" THICK. STEEL STUDS TO BE A MINIMUM GRADE 33 AND .045" THICK (18 GAUGE). STRUCTURAL STEEL TO BE AT LEAST .125" THICK AND A36. ALL ANCHORS INTO METAL SHALL EXTEND AT LEAST 3 SCREW THREADS BEYOND THE MATERIAL. #10 & #12 ANCHORS INTO WOOD MAY BE STEEL, 18-8 S.S. OR 410 S.S.

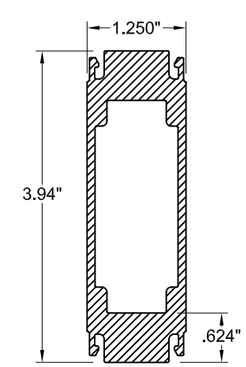


1.25" X 3.94" X .624" MULLION

| Rev.# | Date | Rev. |
|---|---|---|
| D | 10/13/23 | DELETE 1/4" & 3/16" ULTRACONS. SB |


PREPARED BY A. LYNN MILLER
1070 TECHNOLOGY DRIVE
N. VENICE, FL 34275
(941) 480-1600


REGISTRATION #29296


COPYRIGHT © 2023 PGT, INC., LIMITED LICENSE TO MAKE COPIES FOR PERMITTING.



PGT Custom Windows and Doors
1070 TECHNOLOGY DRIVE
N. VENICE, FL 34275
(941) 480-1600


| Title | Date | Drawn By | DWG No. | Sheet |
|---|---|---|---|---|
| 5400/5500 SERIES ALUMINUM TUBE MULLIONS | 02/03/15 | J ROSOWSKI | 5XMULLS-FPA | 8 OF 9 |

Desc.: 1.25 X 3.94 X .624 MULL SPECS

Series: 5400/5500

ANTHONY LYNN MILLER
LICENSE
No. 58705
A. Lynn Miller
10/13/23
STATE OF FLORIDA
PROFESSIONAL ENGINEER

A. LYNN MILLER, P.E.
P.E.# 58705

# USE THIS SHEET FOR CLIPPED MULLIONS

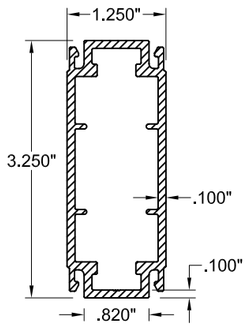


1.25" X 3.25" X .100"
MULLION
6005-T5 ALUM.
X-SECTION

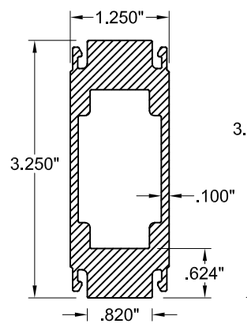


1.25" X 3.25" X .624"
MULLION
6005-T5 ALUM.
X-SECTION

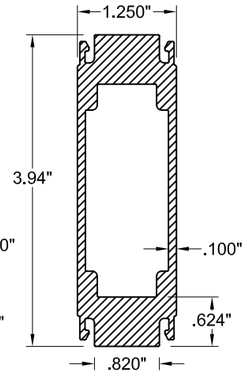


1.25" X 3.94" X .624"
MULLION
6005-T5 ALUM.
X-SECTION

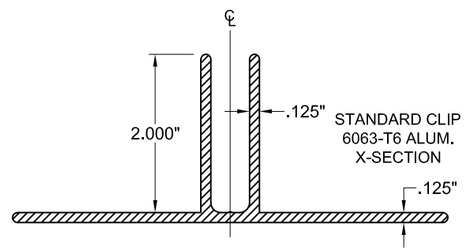


STANDARD CLIP
6063-T6 ALUM.
X-SECTION

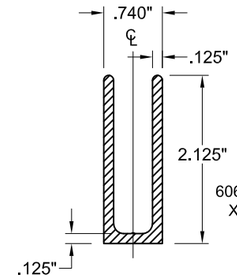


U-CLIP
6063-T6 ALUM.
X-SECTION

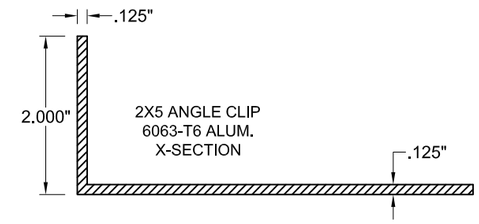


2X5 ANGLE CLIP
6063-T6 ALUM.
X-SECTION

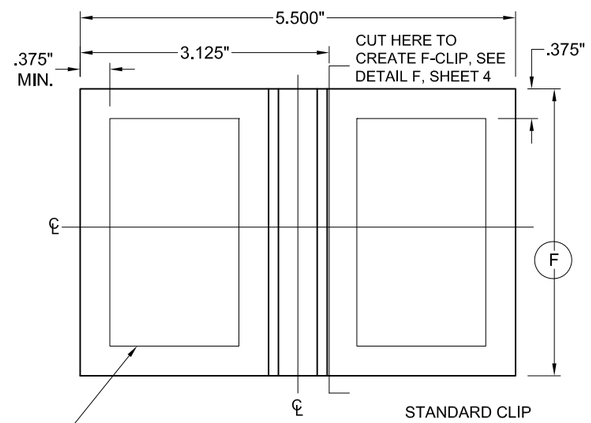


STANDARD CLIP
6063-T6 ALUM.
TOPVIEW

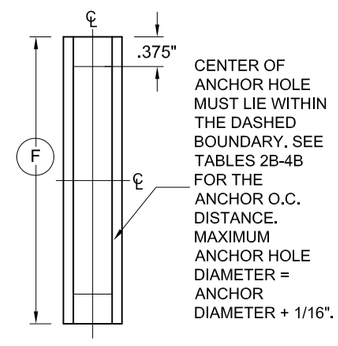


U-CLIP
6063-T6 ALUM.
TOPVIEW

CENTER OF ANCHOR HOLE MUST LIE WITHIN THE DASHED BOUNDARY. SEE TABLES 2B-4B FOR THE ANCHOR O.C. DISTANCE. MAXIMUM ANCHOR HOLE DIAMETER = ANCHOR DIAMETER + 1/16".

CENTER OF ANCHOR HOLE MUST LIE WITHIN THE DASHED BOUNDARY. SEE TABLES 2B-4B FOR THE ANCHOR O.C. DISTANCE. MAXIMUM ANCHOR HOLE DIAMETER = ANCHOR DIAMETER + 1/16".

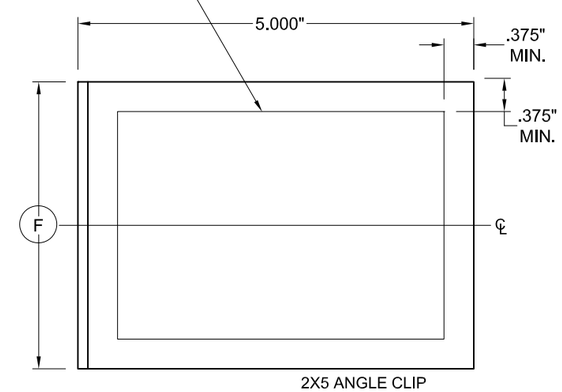


2X5 ANGLE CLIP
6063-T6 ALUM.
TOPVIEW

CENTER OF ANCHOR HOLE MUST LIE WITHIN THE DASHED BOUNDARY. SEE TABLES 2B-4B FOR THE ANCHOR O.C. DISTANCE. MAXIMUM ANCHOR HOLE DIAMETER = ANCHOR DIAMETER + 1/16".

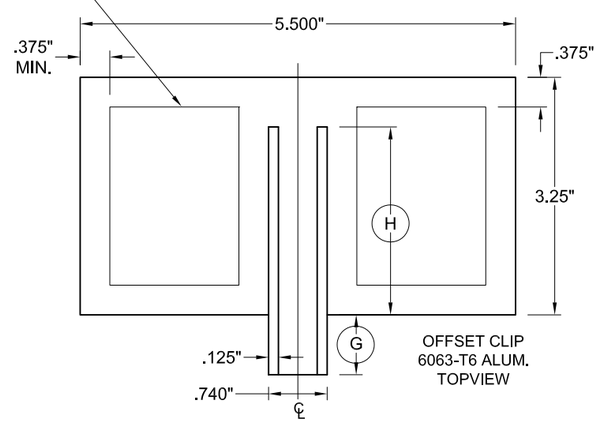


OFFSET CLIP
6063-T6 ALUM.
TOPVIEW

INSTRUCTIONS:

1) DETERMINE THE DESIGN PRESSURE REQUIREMENT (LBS/FT²) FOR THE OPENING USING THE **ASCE-7 STANDARD**.

2) CHOOSE A MULLION TYPE THAT WILL FIT THE DEPTH OF THE FENESTRATION PRODUCT'S FRAME DEPTH.

3) REFER TO SHEETS 6-8 TO DETERMINE IF THE WIND LOADING IS "RECTANGULAR" OR "TRIANGULAR/TRAPEZOIDAL".

4) FIND THE CHOSEN MULLION'S MULLION CAPACITY (LBS/FT²) FROM TABLES 2A THROUGH 4A, ON SHEETS 6 THROUGH 8 RESPECTIVELY, USING THE MULLION TYPE, LENGTH AND OPENING WIDTH OR HEIGHT (DEPENDING IF THE MULLION IS SPANNING VERTICALLY OR HORIZONTALLY). THE MULLION CAPACITY (LBS/FT²) OBTAINED SHALL MEET OR EXCEED THE DESIGN PRESSURE REQUIREMENT (LBS/FT²) FOR THE OPENING OBTAINED IN STEP 1).

5) FROM THE SAME TABLE USED IN STEP 4) ABOVE, FIND THE VALUE IN THE NEXT COLUMN ANCHOR CAPACITY REQUIRED (LBS). THIS VALUE REPRESENTS THE WINDLOAD TRANSFERRED TO THE SUBSTRATE BY THE ANCHORS AND MUST BE MET TO ATTAIN THE FULL MULLION CAPACITY.

6) FROM THE ANCHOR CAPACITY (LBS) TABLE ON THE SAME SHEET AND USING YOUR ACTUAL SUBSTRATE CONDITION ( MULTIPLE ANCHOR/SUBSTRATE/ANCHOR-CLIP PATTERN MAY APPLY) SELECT AN ANCHOR CLIP PATTERN AND VERIFY THAT THE REQUIRED ANCHOR CAPACITY IS MET.

7) IF THE MULLION CAPACITY (LBS/FT²) OBTAINED IN THE TABLE IS HIGHER THAN THE DESIGN PRESSURE REQUIREMENT (LBS/FT²) FOR THE OPENING, YOU MAY USE THE **"ANCHOR CAPACITY ADJUSTMENT FORMULA"** TO OBTAIN THE LOWER ANCHOR CAPACITY REQUIRED. WITH THIS VALUE A LOWER ANCHOR CAPACITY OPTION MAY BE SELECTED FOR THE SAME SUBSTRATE

8) VERIFY THE DESIGN PRESSURE RATING (LBS/FT²) FOR THE FENESTRATION PRODUCT TO BE USED AND COMPARE WITH THE FINAL MULLION CAPACITY (LBS/FT²) OBTAINED FOR THE MULLION SYSTEM. THE LOWER OF THE TWO SHALL APPLY FOR THE ENTIRE MULLED FENESTRATION PRODUCT ASSEMBLY.
9) HIGHLIGHT OPTION USED AND TABLE VALUES USED IN A SPECIFIC APPLICATION WHEN USING THIS APPROVAL TO APPLY FOR A PERMIT.

TABLE C

| Dimension | Value (in) | For Mullion: |
|---|---|---|
| F | 2.250 | 1.25" X 3.25" X .100" Aluminum Tube Mullion |
| G | 0.750 | |
| H | 1.500 | |
| F | 1.938 | 1.25" X 3.25" X .624" Aluminum Tube Mullion |
| G | 0.500 | |
| H | 1.438 | |
| F | 2.625 | 1.25" X 3.94" X .624" Aluminum Tube Mullion |
| G | 1.125 | |
| H | 1.500 | |

TABLE D

| Mull Dimension (sheet #) | PGT Part # | | | | |
|---|---|---|---|---|---|
| | Mullion | Std. Clip | Offset Clip | U-Clip | Angle Clip |
| 1.25" X 3.25" X .100" (5) | 20160 | 6661127M | 6661124M | 6662410M | 6665115M |
| 1.25" X 3.25" X .624" (6) | 20161 | 6661128M | 6661125M | 6662411M | 6665116M |
| 1.25" X 3.94" X .624" (7) | 20162 | 6661117M | 6661126M | 666241M | 666517M |

| Rev. | Date | |
|---|---|---|
| D | 10/13/23 | NO CHANGES, THIS SHEET. SB |

PREPARED BY A. LYNN MILLER
1070 TECHNOLOGY DRIVE
N. VENICE, FL 34275
(941) 480-1600

REGISTRATION #29296

COPYRIGHT © 2023 PGT, INC., LIMITED LICENSE TO MAKE COPIES FOR PERMITTING.

PGT
Custom Windows and Doors
1070 TECHNOLOGY DRIVE
N. VENICE, FL 34275
(941) 480-1600

| Title | Date | Drawn By | DWG No. | Sheet |
|---|---|---|---|---|
| 5400/5500 SERIES ALUMINUM TUBE MULLIONS | 02/03/15 | J ROSOWSKI | 5XMULLS-FPA | 9 OF 9 |

Desc.: MULLION AND CLIP DIMENSIONS

Series: 5400/5500

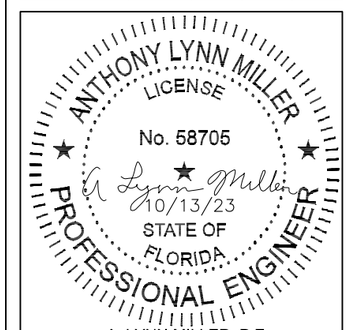


A. LYNN MILLER, P.E.
P.E.# 58705